84 AC THREADGILL CREEK

HARPER, TEXAS

FREDERICKSBURG REALTY GROUP
TEXAS RANCH REALTY TEAM

84 AC Threadgill Creek
9352 N Rand Rd 783 | Harper, Texas 78631 | Gillespie County
84.15+/- Acres
$1,990,000

Agent
Justin Cop

Property Highlights

- **84.15± acres** in Gillespie County
- **Main home:** 2,076 sq ft, built in 2004
- **Rock exterior with ranch-style interior**: stained concrete floors, wood ceilings, masonry fireplace
- **Spacious kitchen** with stainless steel appliances, wine fridge, island, and farmhouse sink
- **Primary suite** with gas fireplace
- **Covered front and back porches**, plus outdoor patio with built-in grills and masonry fireplace
- **New HVAC system** and **22 kW Generac generator**
- **Finished bonus room** above main house with exterior access
- **1,000-gallon propane tank** with surge protector and lightning rods
- **750 sq ft casita** (1 bed, 1 bath), built 2007, located near metal barn
- **Barn apartment** built in 2007, with full bath, kitchenette and living area
- **6 horse stalls** in large wooden barn
- **600 sq ft workshop/garage** in metal barn
- **12-acre hay field**, improved pastures, and multiple gardens
- **¼-mile circular track**
- **Water well** with 2,500-gallon storage tank
- **2 septic systems** and **rainwater collection system**
- **Private and peaceful setting** with good soils
- Ideal for multigenerational living, equestrian use, or weekend retreat
    - 10 minutes to Harper (9.3 miles)
    - ~27 miles to Fredericksburg
    - ~31 miles to Kerrville

Property Taxes:
$10,669.77 (total)
$9,164.89 house
$9,170.72 land $1,504.88 with exemption

Set on 84± scenic acres in Gillespie County, this private Hill Country estate offers a beautifully maintained homestead with a versatile mix of residential, agricultural, and equestrian improvements. Located just outside Harper and a short drive to Fredericksburg, this property is ideal for full-time living, extended family use, or a peaceful weekend retreat.

The main residence, built in 2004, features classic Hill Country architecture with rock exterior, deep covered porches, and a warm ranch-style interior. Inside, you'll find stained concrete floors, wood ceilings, a large masonry fireplace, and an open-concept living area that flows seamlessly into a spacious kitchen with stainless steel appliances, a wine fridge, farmhouse sink, and a center island perfect for gathering. The primary suite includes a gas fireplace, and the home has been recently updated with fresh interior paint, a new HVAC system, and a 22 kW Generac generator for added peace of mind. A separate exterior staircase leads to a finished bonus room above, currently used as a cozy guest space with room for two twin beds — perfect for visiting grandkids or extra guests.

Outdoors, enjoy a front and back porch, carport, and a backyard patio complete with built-in grills and another masonry fireplace — perfect for entertaining or unwinding under the stars.

In addition to the main home, the property includes two guest accommodations. A 750 sq ft casita, built in 2007, sits beside a large metal barn with a spacious garage/workshop and open bay for equipment. On the opposite end of the property, a wooden horse barn includes six stalls and another well-appointed guest suite with a kitchenette, living area, and full bath. Both casitas reflect the same ranch-style charm with concrete floors and wood ceilings.

The land features good soils, gentle topography, improved pastures, and a 12-acre hay field. Infrastructure includes a water well with 2,500-gallon storage tank, two septic systems, rainwater collection, and a 1,000-gallon propane tank with surge protection and lightning rods.

With its flexible layout, multiple residences, and solid improvements, this property is ready to support a variety of uses — from quiet country living to multigenerational family stays or recreational enjoyment. It's a rare find in a great location.

IMPROVEMENTS

- **Water well system upgraded** (Jan. 2021 by Aqua Doc Well Service, Harper, TX)
    - New pump, motor, sub-cable, drop pipe
    - Converted to constant pressure system
    - Contact: Chad Meyers (830) 329-3992
- **Main house upgrades**
    - New LG refrigerator (Jan. 2021)
    - AO Smith R4MA-320E instant water heater (Mar. 2021 by Holloway Plumbing, Kerrville – (830) 896-0890)
    - Under-cabinet Waterdrop RO system installed (2021)
    - Interior & exterior trim repainted (Summer 2022 by Baker Painting, Fredericksburg – (830) 997-2454)
    - Gas logs and fireplace starter installed (May 2023 by Hill Country Fireplaces, Boerne – (210) 838-2365)
    - New HVAC system: indoor/outdoor units + thermostat (Mar. 2022 by K&R Heating & Cooling, Kerrville – (830) 460-5047)

- **Casita improvements**
    - New water heater (Summer 2022 by Aqua Doc)
    - Toilet replaced (2022)
- **Water system enhancements**
    - Rainwater collection tank
    - UV water purification system (Summer 2022 by Aqua Doc)
- **Security & power upgrades**
    - 22 kW Generac generator (Oct. 2021 by Waterloo Power, Kyle – Mario Rodriguez (512) 644-7794)
    - 1,000-gallon propane tank (Oct. 2021 by Hill Country Propane, Fredericksburg – (830) 833-0300)
    - Lightning rods installed (Sept. 2022 by Corrigan Lightning Rods – (830) 312-9000 / (512) 878-3372)
    - Front gate operating system replaced (Aug. 2022 by Bobby Barker, Kerrville – (830) 928-3920)
- **Barn apartment updates**
    - Under-cabinet refrigerator installed (Summer 2022)
- **Feeders**
    - Feed Smart Feeders installed (Aug. 2021 by Feed Smart, Inc. – (405) 880-6595)

EQUIPMENT (Conveys with Property)

- **Can-Am Defender 6UMF** – Purchased new Jan. 2021 (Destination Cyclesports, Kerrville)
- **Kubota 56 HP Diesel Tractor** (4WD, Shuttle Transmission) – Model M5660 with front-end loader & 72" QA bucket (Purchased new 2021 from Ewald Kubota, Fredericksburg)
- **Implements & Attachments**
    - Hay King 8' disk harrow
    - Armstrong 8' chain harrow
    - Armstrong 49" pallet fork
    - Landpride BB2572 box blade (used)
    - Landpride RCF2072 shredder (used)
- **Kawasaki Zero Turn Mower** – 24 HP, 60" deck, Model Z421KWT-3-60 (Purchased 2021)
- **Utility Trailer** – Type S, Model BUM, 1,800 lb empty weight, 5,200 lb capacity (J4 Trailers, Fredericksburg – 2021)
- **Stock Trailer** – 6x16x6’6”, Calico Bumper Pull (Silver, 2022 model) – Purchased Oct. 2021 from J4 Trailers
- **Kawasaki Mule 610 4x4 XC Utility Vehicle (2017)** – Purchased used in 2021 (needs service)

ITEMS THAT WILL NOT CONVEY

Casita:

- Floor lamp in bedroom

Main House:

- Framed mission picture on fireplace mantel
- Bedside lamp in main bedroom
- Printer in main bedroom closet
- Hunting scope and two hats in second bedroom (on top of armoire)
- Telescope in second bedroom closet
- Framed deer, frog, and moth photos in hall bathroom

- Framed bird drawing in hall bathroom
- Dollhouse in dining area
- Three framed pictures in dining area (coyote, rooster, deer)
- Kitchen knives in block on kitchen counter

Patio:

- Child's bouncy horse

Well House:

- Four white folding tables and black folding chairs

Note: All other furnishings, décor, equipment, tools, and appliances will convey with the sale.

A legal description of same date accompanies this plat.

This tract is subject to the following easements listed in Hill Country Title, Inc. Commitment for Title Insurance, G. F. No. 112-385, issued June 5, 2012:
- Telephone R.O.W. Easement recorded in Vol. 150, Pg. 82 et seq., Gillespie Co. Deed Records.
- Easement conveyed to the State of Texas in R.O.W. Deed recorded in Vol. 74, Pg. 54 et seq., Gillespie Co. Deed Records.
- Right of Way Easement to Central Texas Electric Cooperative, Inc. recorded in Vol. 154, Pg. 35 et seq., Gillespie County Deed Records.
- Telephone Line Right of Way Easement to Hill Country Telephone Cooperative, Inc., recorded in Vol. 580, Pg. 44, Official Public Records of Gillespie County, TX.

Plat and accompanying legal description prepared from an on the ground survey performed under my direction and supervision.

Dale Allen Sultemeier
Registered Professional Land Surveyor
No. 4542 - State of Texas

STATE OF TEXAS REGISTERED Dale Allen Sultemeier 4542 PROFESSIONAL LAND SURVEYOR

GRP

CURVE TABLE					
CURVE	LENGTH	RADIUS	CENTRAL ANGLE	CHORD BEARING	CHORD
C10	835.27'	1859.85'	26°38'29"	N 67°53'01" E	828.55'
DEED, 516/773					
CURVE	LENGTH	RADIUS	CENTRAL ANGLE	CHORD BEARING	CHORD
C11	835.33'	1810.08'	26°30'24"	N 68°07'01" E	828.61'

DEED, 516/773		
LINE	BEARING	LENGTH
L9	S 00°05'15" E	1653.16'
L10	S 89°40'22" W	3183.21'
L11	N 50°46'46" E	1081.38'
L12	N 50°47'29" E	1081.18'
L13	N 79°24'28" E	697.44'

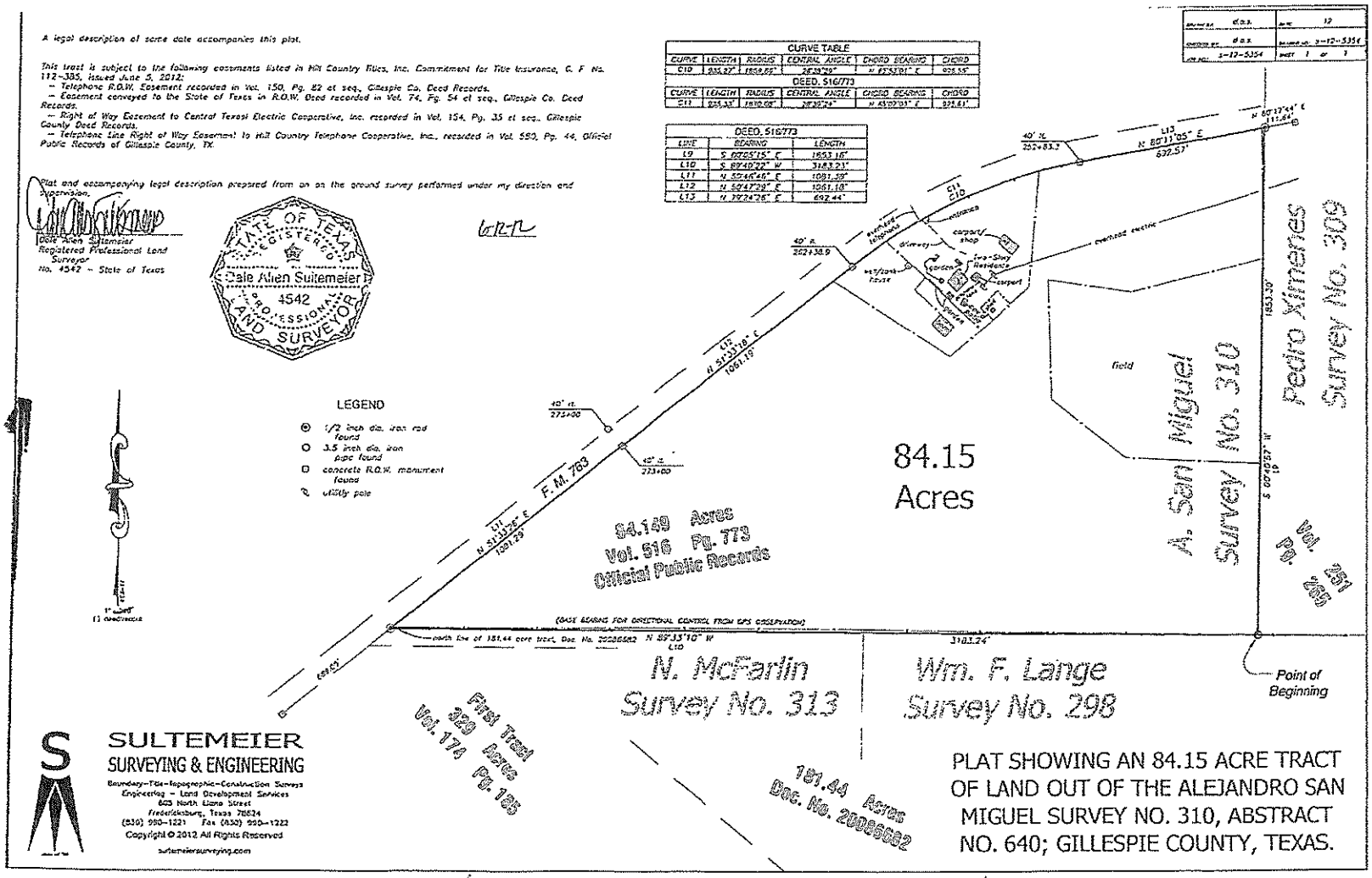

SULTEMEIER
SURVEYING & ENGINEERING
Boundary–Title–Topographic–Construction Surveys
Engineering – Land Development Services
603 North Llano Street
Fredericksburg, Texas 78624
(830) 990-1221 Fax (830) 990-1222
Copyright © 2012 All Rights Reserved
sultemeiersurveying.com

PLAT SHOWING AN 84.15 ACRE TRACT OF LAND OUT OF THE ALEJANDRO SAN MIGUEL SURVEY NO. 310, ABSTRACT NO. 640; GILLESPIE COUNTY, TEXAS.

Survey acknowledged by:

10/28/20 10/28/20

9352 N RANCH ROAD 783

Texas, AC +/-

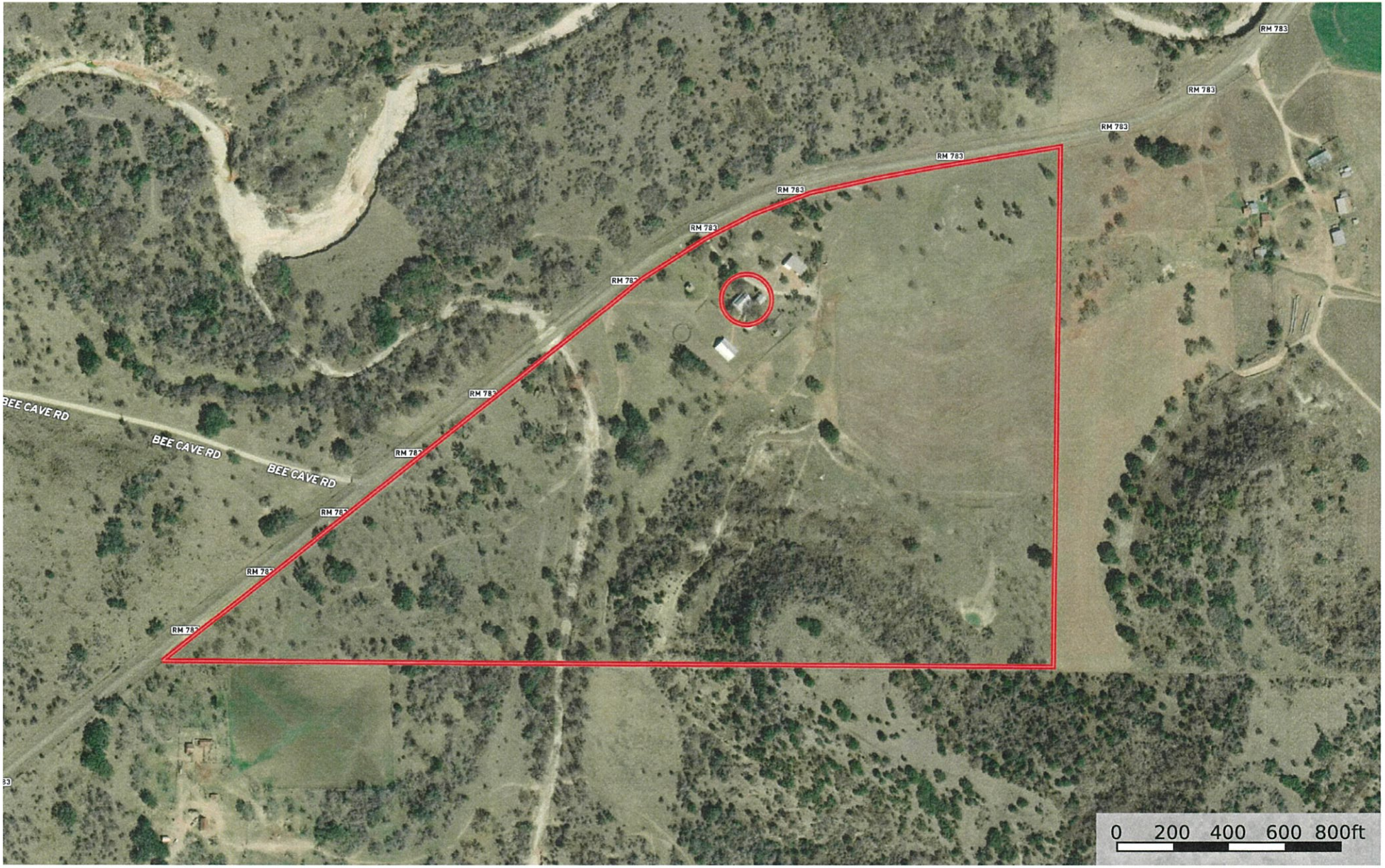

Boundary

Justin Cop
P: 830-997-6531 www.fredericksburgrealty.com 257 West Main St.

The information contained herein was obtained from sources deemed to be reliable. Land id™ Services makes no warranties or guarantees as to the completeness or accuracy thereof.

9352 N RANCH ROAD 783

Texas, AC +/-

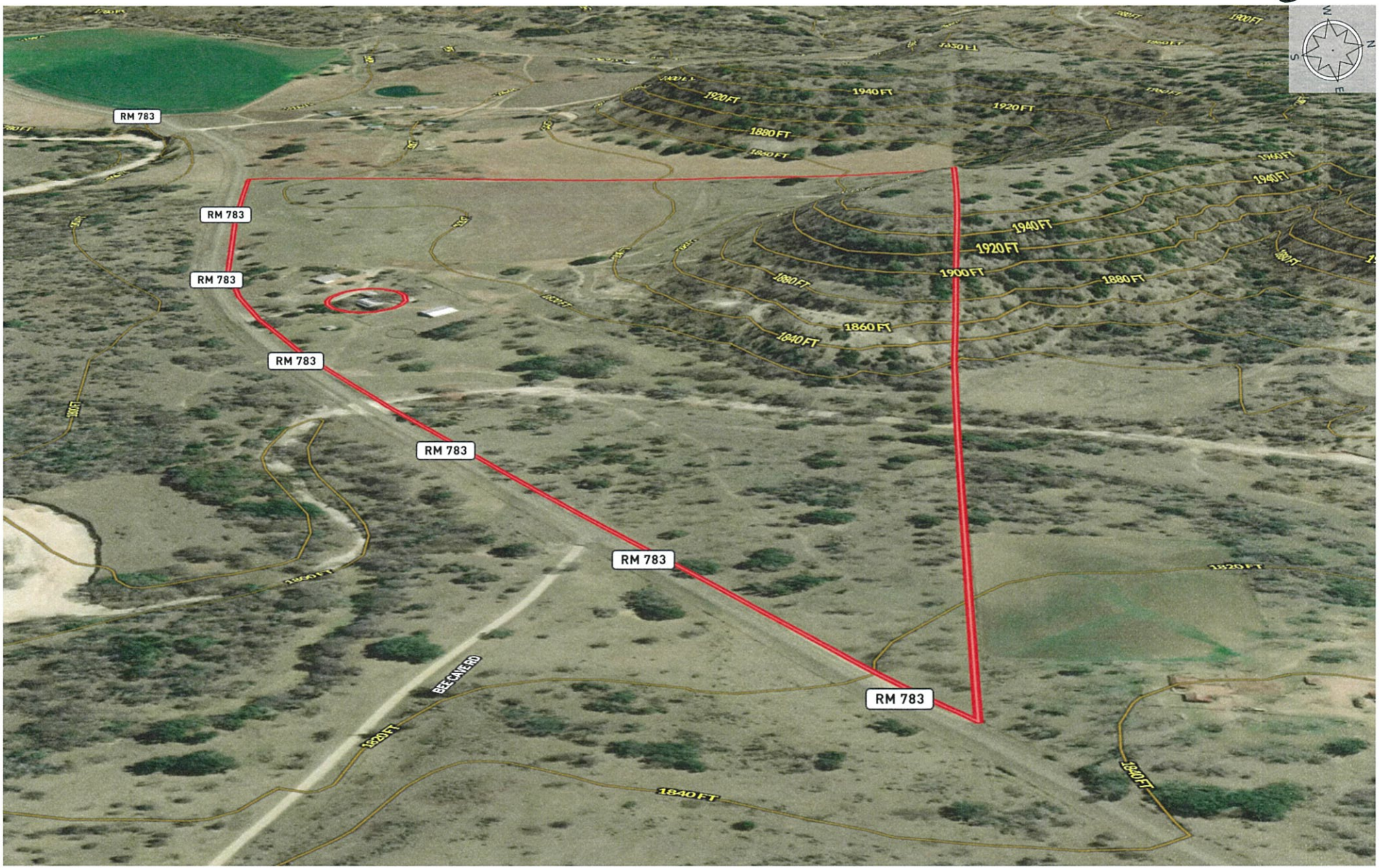

Boundary

Justin Cop
P: 830-997-6531 www.fredericksburgrealty.com 257 West Main St.

The information contained herein was obtained from sources deemed to be reliable. Land id™ Services makes no warranties or guarantees as to the completeness or accuracy thereof.

9352 N RANCH ROAD 783

Texas, AC +/-

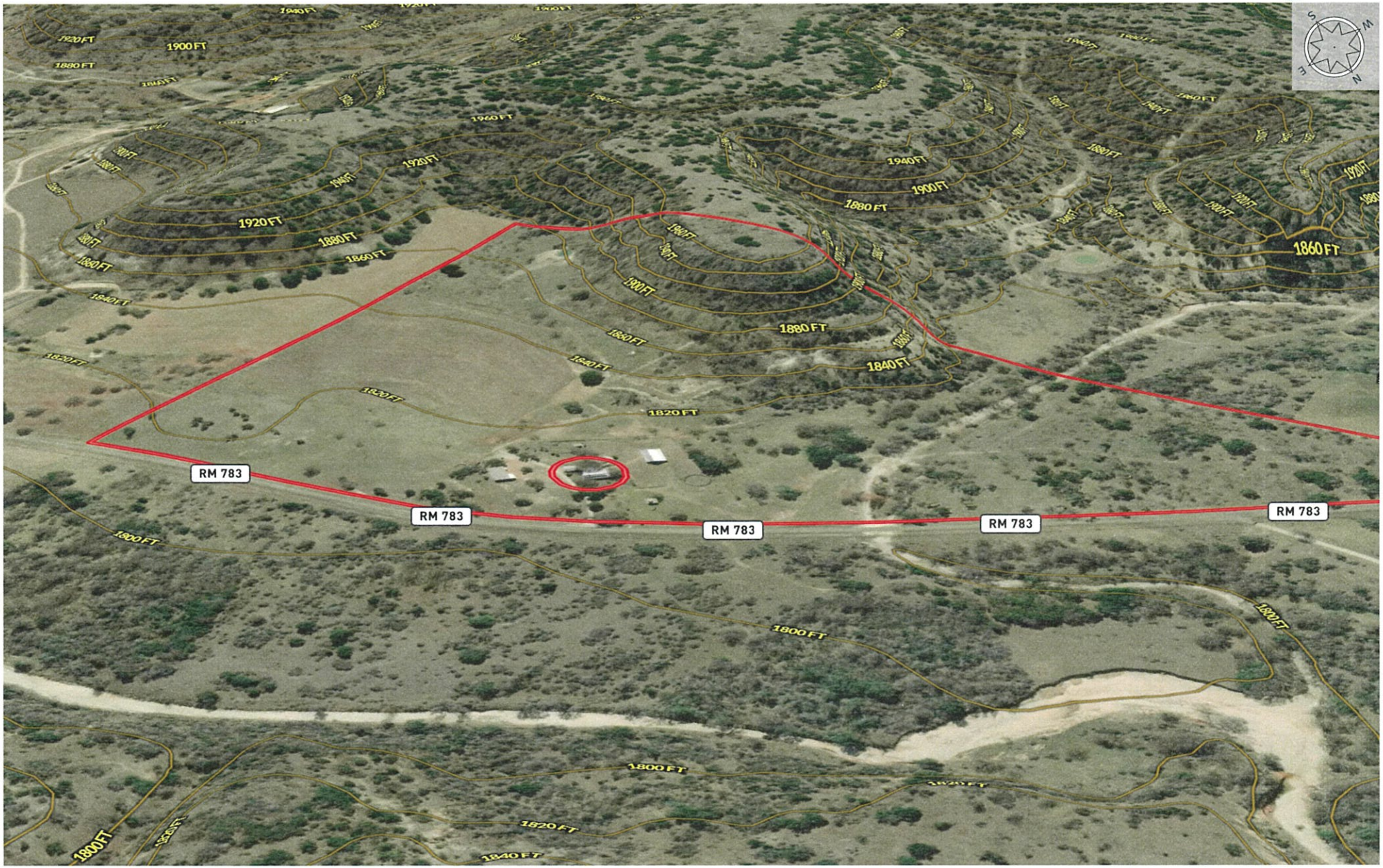

Boundary

Justin Cop
P: 830-997-6531 www.fredericksburgrealty.com 257 West Main St.

The information contained herein was obtained from sources deemed to be reliable. Land id!™ Services makes no warranties or guarantees as to the completeness or accuracy thereof

9352 N RANCH ROAD 783

Texas, AC +/-

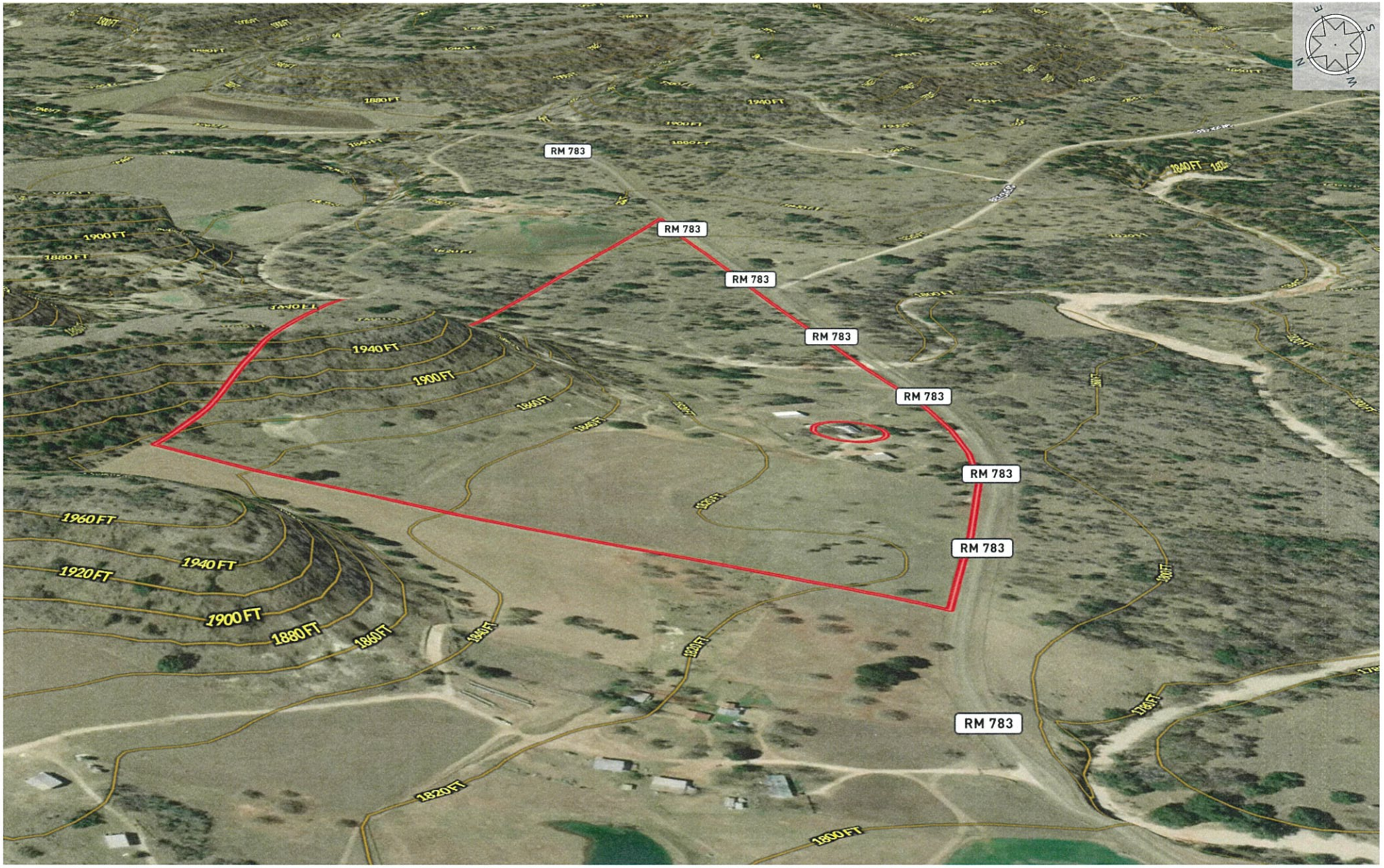

Boundary

Justin Cop

P: 830-997-6531 www.fredericksburgrealty.com 257 West Main St.

The information contained herein was obtained from sources deemed to be reliable. Land id™ Services makes no warranties or guarantees as to the completeness or accuracy thereof.

TEXAS REALTORS

SELLER'S DISCLOSURE NOTICE

©Texas Association of REALTORS®, Inc. 2022

Section 5.008, Property Code requires a seller of residential property of not more than one dwelling unit to deliver a Seller's Disclosure Notice to a buyer on or before the effective date of a contract. **This form complies with and contains additional disclosures which exceed the minimum disclosures required by the Code.**

CONCERNING THE PROPERTY AT 9352 N RR 783 Harper , TX 78631 Main Home

THIS NOTICE IS A DISCLOSURE OF SELLER'S KNOWLEDGE OF THE CONDITION OF THE PROPERTY AS OF THE DATE SIGNED BY SELLER AND IS NOT A SUBSTITUTE FOR ANY INSPECTIONS OR WARRANTIES THE BUYER MAY WISH TO OBTAIN. IT IS NOT A WARRANTY OF ANY KIND BY SELLER, SELLER'S AGENTS, OR ANY OTHER AGENT.

Seller X is __ is not occupying the Property. If unoccupied (by Seller), how long since Seller has occupied the Property? __ _____ (approximate date) or __ never occupied the Property

Section 1. The Property has the items marked below: (Mark Yes (Y), No (N), or Unknown (U).)

This notice does not establish the items to be conveyed. The contract will determine which items will & will not convey.

Item	Y	N	U
Cable TV Wiring			X
Carbon Monoxide Det.			X
Ceiling Fans	X		
Cooktop MEK		X	
Dishwasher	X		
Disposal	X		
Emergency Escape Ladder(s)		X	
Exhaust Fans	X		
Fences	X		
Fire Detection Equip. MEK		X	
French Drain			X
Gas Fixtures	X		
Liquid Propane Gas:	X		
-LP Community (Captive)		X	
-LP on Property	X		

Item	Y	N	U
Natural Gas Lines		X	
Fuel Gas Piping:			X
-Black Iron Pipe			
-Copper			
-Corrugated Stainless Steel Tubing			
Hot Tub		X	
Intercom System		X	
Microwave	X		
Outdoor Grill	X		
Patio/Decking	X		
Plumbing System	X		
Pool		X	
Pool Equipment		X	
Pool Maint. Accessories		X	
Pool Heater		X	

Item	Y	N	U
Pump: __ sump __ grinder		X	
Rain Gutters	X		
Range/Stove	X		
Roof/Attic Vents			X
Sauna		X	
Smoke Detector	X		
Smoke Detector - Hearing Impaired			X
Spa		X	
Trash Compactor		X	
TV Antenna			X
Washer/Dryer Hookup	X		
Window Screens Partial	X		
Public Sewer System		X	

Item	Y	N	U	Additional Information
Central A/C	X			X electric __ gas number of units: one
Evaporative Coolers		X		number of units:
Wall/Window AC Units		X		number of units:
Attic Fan(s)			X	if yes, describe:
Central Heat	X			X electric __ gas number of units: one
Other Heat		X		if yes, describe:
Oven	X			number of ovens: one X electric __ gas __ other:
Fireplace & Chimney	X			__ wood X gas logs __ mock __ other:
Carport	X			__ attached X not attached
Garage		X		__ attached __ not attached
Garage Door Openers		X		number of units: number of remotes:
Satellite Dish & Controls		X		__ owned __ leased from:
Security System		X		__ owned __ leased from:

Concerning the Property at 9352 N RR 783 Harper , TX 78631 Main

	Y	N	U	
Solar Panels		X		__ owned __ leased from:
Water Heater	X			X electric __ gas __ other: number of units: 1
Water Softener	X			X owned __ leased from:
Other Leased Items(s)				if yes, describe:
Underground Lawn Sprinkler		X		__ automatic __ manual areas covered
Septic / On-Site Sewer Facility	X			if yes, attach Information About On-Site Sewer Facility (TXR-1407)

Water supply provided by: __ city X well __ MUD __ co-op __ unknown __ other:
Was the Property built before 1978? __ yes X no __ unknown
(If yes, complete, sign, and attach TXR-1906 concerning lead-based paint hazards).
Roof Type: metal Age: 21yrs (approximate)
Is there an overlay roof covering on the Property (shingles or roof covering placed over existing shingles or roof covering)? __ yes X no __ unknown

Are you (Seller) aware of any of the items listed in this Section 1 that are not in working condition, that have defects, or are need of repair? X yes __ no If yes, describe (attach additional sheets if necessary): Gas log fireplace in master bedroom does not function.

Section 2. Are you (Seller) aware of any defects or malfunctions in any of the following? (Mark Yes (Y) if you are aware and No (N) if you are not aware.)

Item	Y	N
Basement		X
Ceilings		X
Doors		X
Driveways		X
Electrical Systems		X
Exterior Walls		X

Item	Y	N
Floors		X
Foundation / Slab(s)		X
Interior Walls		X
Lighting Fixtures		X
Plumbing Systems		X
Roof		X

Item	Y	N
Sidewalks		X
Walls / Fences		X
Windows	X	
Other Structural Components		X

If the answer to any of the items in Section 2 is yes, explain (attach additional sheets if necessary): Some windows do not open.

Section 3. Are you (Seller) aware of any of the following conditions? (Mark Yes (Y) if you are aware and No (N) if you are not aware.)

Condition	Y	N
Aluminum Wiring		X
Asbestos Components		X
Diseased Trees: __ oak wilt	X	
Endangered Species/Habitat on Property		X
Fault Lines		X
Hazardous or Toxic Waste		X
Improper Drainage		X
Intermittent or Weather Springs		X
Landfill		X
Lead-Based Paint or Lead-Based Pt. Hazards		X
Encroachments onto the Property		X
Improvements encroaching on others' property		X
Located in Historic District		X
Historic Property Designation		X
Previous Foundation Repairs		X

Condition	Y	N
Radon Gas		X
Settling		X
Soil Movement		X
Subsurface Structure or Pits		X
Underground Storage Tanks		X
Unplatted Easements		X
Unrecorded Easements		X
Urea-formaldehyde Insulation		X
Water Damage Not Due to a Flood Event		X
Wetlands on Property		X
Wood Rot		X
Active infestation of termites or other wood destroying insects (WDI)		X
Previous treatment for termites or WDI		X
Previous termite or WDI damage repaired		X
Previous Fires		X

Concerning the Property at 9352 N RR 783 Harper , TX 78631 Main

	Y	N	U
Previous Roof Repairs			X
Previous Other Structural Repairs			X
Previous Use of Premises for Manufacture of Methamphetamine			X

	Y	N	U
Termite or WDI damage needing repair			X
Single Blockable Main Drain in Pool/Hot Tub/Spa*		X	

If the answer to any of the items in Section 3 is yes, explain (attach additional sheets if necessary): _____

*A single blockable main drain may cause a suction entrapment hazard for an individual.

Section 4. Are you (Seller) aware of any item, equipment, or system in or on the Property that is in need of repair, which has not been previously disclosed in this notice? __ yes X no If yes, explain (attach additional sheets if necessary): _____

Section 5. Are you (Seller) aware of any of the following conditions?* (Mark Yes (Y) if you are aware and check wholly or partly as applicable. Mark No (N) if you are not aware.)

Y	N	
__	X	Present flood insurance coverage.
__	X	Previous flooding due to a failure or breach of a reservoir or a controlled or emergency release of water from a reservoir.
__	X	Previous flooding due to a natural flood event.
__	X	Previous water penetration into a structure on the Property due to a natural flood.
__	X	Located __ wholly __ partly in a 100-year floodplain (Special Flood Hazard Area-Zone A, V, A99, AE, AO, AH, VE, or AR).
__	X	Located __ wholly __ partly in a 500-year floodplain (Moderate Flood Hazard Area-Zone X (shaded)).
__	X	Located __ wholly __ partly in a floodway.
__	X	Located __ wholly __ partly in a flood pool.
__	X	Located __ wholly __ partly in a reservoir.

If the answer to any of the above is yes, explain (attach additional sheets as necessary): _____

If Buyer is concerned about these matters, Buyer may consult Information About Flood Hazards (TXR 1414).

For purposes of this notice:

"100-year floodplain" means any area of land that: (A) is identified on the flood insurance rate map as a special flood hazard area, which is designated as Zone A, V, A99, AE, AO, AH, VE, or AR on the map; (B) has a one percent annual chance of flooding, which is considered to be a high risk of flooding; and (C) may include a regulatory floodway, flood pool, or reservoir.

"500-year floodplain" means any area of land that: (A) is identified on the flood insurance rate map as a moderate flood hazard area, which is designated on the map as Zone X (shaded); and (B) has a two-tenths of one percent annual chance of flooding, which is considered to be a moderate risk of flooding.

"Flood pool" means the area adjacent to a reservoir that lies above the normal maximum operating level of the reservoir and that is subject to controlled inundation under the management of the United States Army Corps of Engineers.

"Flood insurance rate map" means the most recent flood hazard map published by the Federal Emergency Management Agency under the National Flood Insurance Act of 1968 (42 U.S.C. Section 4001 et seq.).

"Floodway" means an area that is identified on the flood insurance rate map as a regulatory floodway, which includes the channel of a river or other watercourse and the adjacent land areas that must be reserved for the discharge of a base flood, also referred to as a 100-year flood, without cumulatively increasing the water surface elevation more than a designated height.

"Reservoir" means a water impoundment project operated by the United States Army Corps of Engineers that is intended to retain water or delay the runoff of water in a designated surface area of land.

Section 6. Have you (Seller) ever filed a claim for flood damage to the Property with any insurance provider, including the National Flood Insurance Program (NFIP)?* __ yes X no If yes, explain (attach additional sheets as necessary): _____

*Homes in high risk flood zones with mortgages from federally regulated or insured lenders are required to have flood insurance. Even when not required, the Federal Emergency Management Agency (FEMA) encourages homeowners in high risk, moderate risk, and low risk flood zones to purchase flood insurance that covers the structure(s) and the personal property within the structure(s).

Section 7. Have you (Seller) ever received assistance from FEMA or the U.S. Small Business Administration (SBA) for flood damage to the Property? __ yes X no If yes, explain (attach additional sheets as necessary): _____

Section 8. Are you (Seller) aware of any of the following? (Mark Yes (Y) if you are aware. Mark No (N) if you are not aware.)

Y	N	
__	X	Room additions, structural modifications, or other alterations or repairs made without necessary permits, with unresolved permits, or not in compliance with building codes in effect at the time.
__	X	Homeowners' associations or maintenance fees or assessments. If yes, complete the following: Name of association: _____ Manager's name: _____ Phone: _____ Fees or assessments are: $ _____ per _____ and are: __ mandatory __ voluntary Any unpaid fees or assessment for the Property? __ yes ($ _____) __ no If the Property is in more than one association, provide information about the other associations below or attach information to this notice.
__	X	Any common area (facilities such as pools, tennis courts, walkways, or other) co-owned in undivided interest with others. If yes, complete the following: Any optional user fees for common facilities charged? __ yes __ no If yes, describe: _____
__	X	Any notices of violations of deed restrictions or governmental ordinances affecting the condition or use of the Property.
__	X	Any lawsuits or other legal proceedings directly or indirectly affecting the Property. (Includes, but is not limited to: divorce, foreclosure, heirship, bankruptcy, and taxes.)
__	X	Any death on the Property except for those deaths caused by: natural causes, suicide, or accident unrelated to the condition of the Property.
__	X	Any condition on the Property which materially affects the health or safety of an individual.
__	X	Any repairs or treatments, other than routine maintenance, made to the Property to remediate environmental hazards such as asbestos, radon, lead-based paint, urea-formaldehyde, or mold. If yes, attach any certificates or other documentation identifying the extent of the remediation (for example, certificate of mold remediation or other remediation).
__	X	Any rainwater harvesting system located on the Property that is larger than 500 gallons and that uses a public water supply as an auxiliary water source.

Main

Concerning the Property at 9352 N RR 783 Harper , TX 78631

Y N

__ X The Property is located in a propane gas system service area owned by a propane distribution system retailer.

__ X Any portion of the Property that is located in a groundwater conservation district or a subsidence district.

If the answer to any of the items in Section 8 is yes, explain (attach additional sheets if necessary): _____

Section 9. Within the last 4 years, have you (Seller) received any written inspection reports from persons who regularly provide inspections and who are either licensed as inspectors or otherwise permitted by law to perform inspections? X yes __ no If yes, attach copies and complete the following:

Inspection Date	Type	Name of Inspector	No. of Pages
7-14-2025	Real Estate	Benjamin Feuge	25

Note: A buyer should not rely on the above-cited reports as a reflection of the current condition of the Property. A buyer should obtain inspections from inspectors chosen by the buyer.

Section 10. Check any tax exemption(s) which you (Seller) currently claim for the Property:

__ Homestead
__ Wildlife Management
__ Other: _____
__ Senior Citizen
X Agricultural
__ Disabled
__ Disabled Veteran
__ Unknown

Section 11. Have you (Seller) ever filed a claim for damage, other than flood damage, to the Property with any insurance provider? __ yes X no

Section 12. Have you (Seller) ever received proceeds for a claim for damage to the Property (for example, an insurance claim or a settlement or award in a legal proceeding) and not used the proceeds to make the repairs for which the claim was made? __ yes X no If yes, explain: _____

Section 13. Does the Property have working smoke detectors installed in accordance with the smoke detector requirements of Chapter 766 of the Health and Safety Code?* X unknown __ no __ yes. If no or unknown, explain. (Attach additional sheets if necessary): Not familiar with that Safety Code

**Chapter 766 of the Health and Safety Code requires one-family or two-family dwellings to have working smoke detectors installed in accordance with the requirements of the building code in effect in the area in which the dwelling is located, including performance, location, and power source requirements. If you do not know the building code requirements in effect in your area, you may check unknown above or contact your local building official for more information.*

A buyer may require a seller to install smoke detectors for the hearing impaired if: (1) the buyer or a member of the buyer's family who will reside in the dwelling is hearing-impaired; (2) the buyer gives the seller written evidence of the hearing impairment from a licensed physician; and (3) within 10 days after the effective date, the buyer makes a written request for the seller to install smoke detectors for the hearing-impaired and specifies the locations for installation. The parties may agree who will bear the cost of installing the smoke detectors and which brand of smoke detectors to install.

Main

Concerning the Property at 9352 N RR 783
Harper , TX 78631

Seller acknowledges that the statements in this notice are true to the best of Seller's belief and that no person, including the broker(s), has instructed or influenced Seller to provide inaccurate information or to omit any material information.

Mary E Kochelek, Trustee
Signature of Seller Date Signature of Seller Date

Printed Name: Mary E. Kochelek, Trustee Printed Name:

ADDITIONAL NOTICES TO BUYER:

(1) The Texas Department of Public Safety maintains a database that the public may search, at no cost, to determine if registered sex offenders are located in certain zip code areas. To search the database, visit https://publicsite.dps.texas.gov. For information concerning past criminal activity in certain areas or neighborhoods, contact the local police department.

(2) If the Property is located in a coastal area that is seaward of the Gulf Intracoastal Waterway or within 1,000 feet of the mean high tide bordering the Gulf of Mexico, the Property may be subject to the Open Beaches Act or the Dune Protection Act (Chapter 61 or 63, Natural Resources Code, respectively) and a beachfront construction certificate or dune protection permit may be required for repairs or improvements. Contact the local government with ordinance authority over construction adjacent to public beaches for more information.

(3) If the Property is located in a seacoast territory of this state designated as a catastrophe area by the Commissioner of the Texas Department of Insurance, the Property may be subject to additional requirements to obtain or continue windstorm and hail insurance. A certificate of compliance may be required for repairs or improvements to the Property. For more information, please review *Information Regarding Windstorm and Hail Insurance for Certain Properties* (TXR 2518) and contact the Texas Department of Insurance or the Texas Windstorm Insurance Association.

(4) This Property may be located near a military installation and may be affected by high noise or air installation compatible use zones or other operations. Information relating to high noise and compatible use zones is available in the most recent Air Installation Compatible Use Zone Study or Joint Land Use Study prepared for a military installation and may be accessed on the Internet website of the military installation and of the county and any municipality in which the military installation is located.

(5) If you are basing your offers on square footage, measurements, or boundaries, you should have those items independently measured to verify any reported information.

(6) The following providers currently provide service to the Property:

Electric:	CTEC (Central TX Electric Co-op)	phone #: 830-997-2126
Sewer:		phone #:
Water:	Aqua Doc Well Service (well + rainwater)	phone #: 830-329-3992
Cable:	~~HCTC~~ Do not have cable	phone #:
Trash:	Republic Services	phone #: 210-304-2700
Natural Gas:	Ø	phone #:
Phone Company:	HCTC	phone #: 830-367-5333
Propane:	Harper Propane	phone #: 830-864-4330
Internet:	HCTC	phone #: 830-367-5333

Main

(7) This Seller's Disclosure Notice was completed by Seller as of the date signed. The brokers have relied on this notice as true and correct and have no reason to believe it to be false or inaccurate. YOU ARE ENCOURAGED TO HAVE AN INSPECTOR OF YOUR CHOICE INSPECT THE PROPERTY.

The undersigned Buyer acknowledges receipt of the foregoing notice.

Signature of Buyer Date	Signature of Buyer Date
Printed Name: _____	Printed Name: _____

Fredericksburg Realty, 257 West Main Street Fredericksburg TX 78624
Justin Cop
Phone: (830) 998-2896 Fax:
Produced with Lone Wolf Transactions (zipForm Edition) 717 N Harwood St, Suite 2200, Dallas, TX 75201 www.lwolf.com

TEXAS REALTORS

INFORMATION ABOUT ON-SITE SEWER FACILITY

USE OF THIS FORM BY PERSONS WHO ARE NOT MEMBERS OF THE TEXAS FORMSOURCE IS NOT AUTHORIZED.
©Texas Association of REALTORS®, Inc., 2004

CONCERNING THE PROPERTY AT 9352 N RR 783 Harper , TX 78631 House

A. DESCRIPTION OF ON-SITE SEWER FACILITY ON PROPERTY:

(1) Type of Treatment System: [x] Septic Tank [ ] Aerobic Treatment [ ] Unknown
[ ] _____

(2) Type of Distribution System: Drain Field Leaching Chambers [ ] Unknown

(3) Approximate Location of Drain Field or Distribution System: _____ [ ] Unknown
~~NE of House~~ SW of House

(4) Installer: Dewayne Martin [ ] Unknown

(5) Approximate Age: 21 years [ ] Unknown

B. MAINTENANCE INFORMATION:

(1) Is Seller aware of any maintenance contract in effect for the on-site sewer facility? [ ] Yes [x] No
If yes, name of maintenance contractor: _____
Phone: _____ contract expiration date: _____
Maintenance contracts must be in effect to operate aerobic treatment and certain non-standard" on-site sewer facilities.)

(2) Approximate date any tanks were last pumped? October, 2020

(3) Is Seller aware of any defect or malfunction in the on-site sewer facility? [ ] Yes [X] No
If yes, explain: _____

(4) Does Seller have manufacturer or warranty information available for review? [ ] Yes [X] No

C. PLANNING MATERIALS, PERMITS, AND CONTRACTS:

(1) The following items concerning the on-site sewer facility are attached:
[ ] planning materials [x] permit for original installation [x] final inspection when OSSF was installed
[ ] maintenance contract [ ] manufacturer information [ ] warranty information [ ] _____
1000/2c Serial # 623041 Concrete Tank

(2) "Planning materials" are the supporting materials that describe the on-site sewer facility that are submitted to the permitting authority in order to obtain a permit to install the on-site sewer facility.

(3) **It may be necessary for a buyer to have the permit to operate an on-site sewer facility transferred to the buyer.**

This form is for the exclusive use of the subscriber named below. Any use by others is strictly prohibited. Use of this form does not indicate membership in Texas REALTORS®.
Fredericksburg Realty, 257 West Main Street Fredericksburg TX 78624 Phone: (830) 998-2896 Fax: 9352 N RR 783
Justin Cop
Produced with Lone Wolf Transactions (zipForm Edition) 717 N Harwood St, Suite 2200, Dallas, TX 75201 www.lwolf.com

D. INFORMATION FROM GOVERNMENTAL AGENCIES: Pamphlets describing on-site sewer facilities are available from the Texas Agricultural Extension Service. Information in the following table was obtained from Texas Commission on Environmental Quality (TCEQ) on 10/24/2002. The table estimates daily wastewater usage rates. Actual water usage data or other methods for calculating may be used if accurate and acceptable to TCEQ.

Facility	Usage (gal/day) without water-saving devices	Usage (gal/day) with water-saving devices
Single family dwelling (1-2 bedrooms; less than 1,500 sf)	225	180
Single family dwelling (3 bedrooms; less than 2,500 sf)	300	240
Single family dwelling (4 bedrooms; less than 3,500 sf)	375	300
Single family dwelling (5 bedrooms; less than 4,500 sf)	450	360
Single family dwelling (6 bedrooms; less than 5,500 sf)	525	420
Mobile home, condo, or townhouse (1-2 bedroom)	225	180
Mobile home, condo, or townhouse (each add'l bedroom)	75	60

This document is not a substitute for any inspections or warranties. This document was completed to the best of Seller's knowledge and belief on the date signed. Seller and real estate agents are not experts about on-site sewer facilities. Buyer is encouraged to have the on-site sewer facility inspected by an inspector of Buyer's choice.

Mary E Kochelek 7-31-2025

Signature of Seller Date

Mary E Kochelek

Signature of Seller Date

Receipt acknowledged by:

Signature of Buyer Date

Signature of Buyer Date

Produced with Lone Wolf Transactions (zipForm Edition) 717 N Harwood St, Suite 2200, Dallas, TX 75201 www.lwolf.com 9352 N RR 783

PAYABLE TO: GILLESPIE CO.

APPLICATION FOR PRIVATE SEWAGE SYSTEM
CONSTRUCTION PERMIT AND LICENSE

DATE JUNE 15, 2004 PERMIT NO. 4824 FEE 150.00/xx

wk 713-896-1500

I, hereby make an application for a license to construct and operate a private sewage disposal system in Gillespie County, Texas. 281-580-8080 Good #

OWNER MILES, CARY A & CHERYL C. PHONE NO. 281-895-6014

MAILING ADDRESS 6814 APPLE VALLEY LANE HOUSTON TX 77069

HOUSE NO. AND STREET ADDRESS 9352 N RANCH ROAD 783
SUBDIVISION, DESCRIBED LOCATION OR ATTACH A MAP/SKETCH
NAME ABSTRACT 640 A SAN MIGUEL #310
SIZE ACREAGE OR TRACT 84.149 SECTION ____ BLOCK ____ LOT ____
DESCRIPTION OF STRUCTURE TO BE SERVED
House (✓) Mobile Home ( ) Other ____
Commercial ____ (Type of Business)
Living Area 1,800 SQ.FT. (2) Bedrooms (2) Bathrooms ( ) Disposal ( )
Washing Machine (YES) Dishwasher (NO) Water Softner ( ) Other ____
Water Supply By: Public System ( ) Community ( ) Individual (YES)

DATE June 15, 2004 INSPECTOR-SANITARIAN Dwayne C. Boos

Authorization is hereby given to the Private Sewage Facility, Gillespie County, Texas, Texas Department of Water Resources, the Texas State Department of Health Resources, or their agents or designees, singly or jointly, to enter upon the above described property for the purpose of making soil percolation tests, inspecting sewage systems, or for any reason consistent with the water quality program of the Texas Department of Water Resources, the Texas State Department of Health Resources and the Private Sewage Facility, Gillespie County, Texas.

DATE 5/27/04 X [signature]
Signature of Owner or Authorized Agent

Authorization to proceed with construction will be provided after a joint (Owner or Installer and Inspector for the Private Sewage Facility, Gillespie County, Texas survey of the proposed site for the facility and analysis of percolation test data) (If Required)

THIS PERMIT TO CONSTRUCT IS VALID FOR 180 DAYS.
OFFICIAL USE ONLY

SITE INSPECTION OR PERCOLATION TEST

DATE 6-6-04 PERMIT NO. ____ FEE ____
TYPE SOIL - Rocky ( ) Gravel ( ) Sand (X) Other Class III
SLOPE - Flat (X) Sloping ( ) Other ____
PERCOLATION TEST RESULTS INCHES FALL/20 MINUTES
HOLES (1) ____ (2) ____ (3) ____ (4) ____ (5) ____ (6) ____
(7) ____ (8) ____ PERC. TEST AVERAGE ____

DATE ____ INSPECTOR-SANITARIAN ____
COMMENTS:

SCANNED
R 5164
SEP 22 2004

CERTIFICATION OF APPROVAL

FINAL INSPECTION

DATE JULY 8, 2004 PERMIT NO. 4824 FEE _____

MANUFACTURER BUCHANAN SEPTIC TANKS

TANK #1 SN# 623041 TANK #2 SN# —

SIZE TANK #1 ~~[illegible]~~ 1000/2C GALS. TANK #2 — GALS. TYPE Concrete

ABSORPTION TRENCH (✓) LENGTH ~~[illegible]~~ 181.25 WIDTH 3' (5' CREDIT)

~~ABSORPTION BED AREA~~ LEACHING CHAMBERS ( ) SQUARE FEET ~~[illegible]~~ 906.25 SQ FT

COMMERCIAL ( ) PRIVATE RESIDENCE (✓)

INSTALLER OR CONTRACTOR Dewayne MARTIN Lic. # OS 2504 - PH. 325-347-5190

ADDRESS MASON PHONE # _____

DATE JULY 8, 2004 FINAL INSPECTION MADE BY Dwayne Cboos

(INSPECTION IS REQUIRED AFTER TANK AND PIPES ARE INSTALLED, BUT NOT COVERED)

MAKE A SKETCH OF SYSTEM

(NOT TO SCALE)

LEACHING CHAMBERS
"INFILTRATOR"

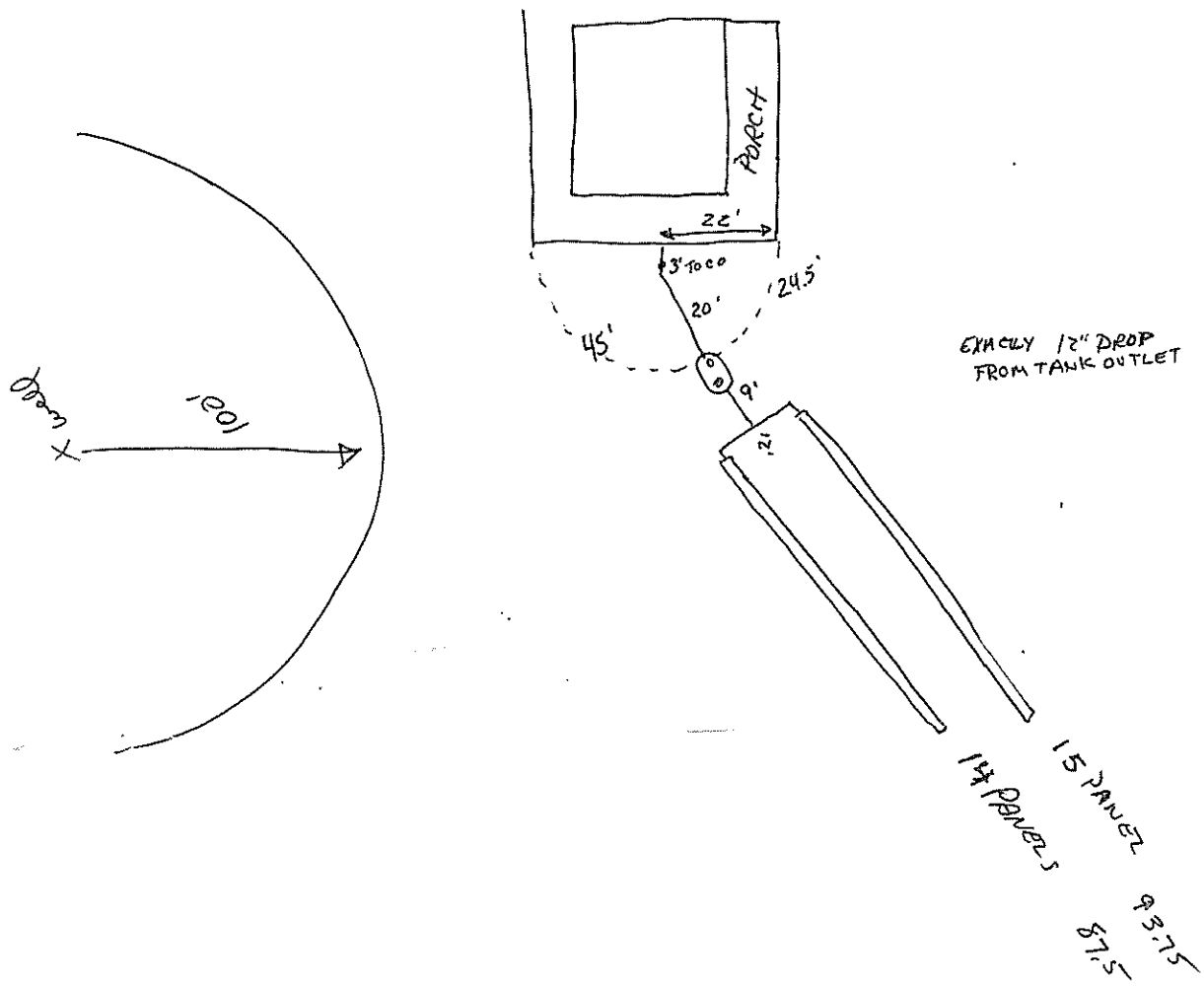

er to the FLOOD INSURANCE RATE MAP EFFECTIVE DATE shown this map to determine when actuarial rates apply to structures in as where elevations or depths have been established.

determine if flood insurance is available, contact an insurance agent or the National Flood Insurance Program at (800) 638-6620.

APPROXIMATE SCALE IN FEET

2000 0 2000

NATIONAL FLOOD INSURANCE PROGRAM

FIRM

FLOOD INSURANCE RATE MAP

GILLESPIE COUNTY, TEXAS AND INCORPORATED AREAS

PANEL 50 OF 525

(SEE MAP INDEX FOR PANELS NOT PRINTED)

CONTAINS:

COMMUNITY	NUMBER	PANEL	SUFFIX
GILLESPIE COUNTY, UNINCORPORATED AREAS	480696	0050	C

MAP NUMBER
48171C0050 C

EFFECTIVE DATE:
OCTOBER 19, 2001

Federal Emergency Management Agency

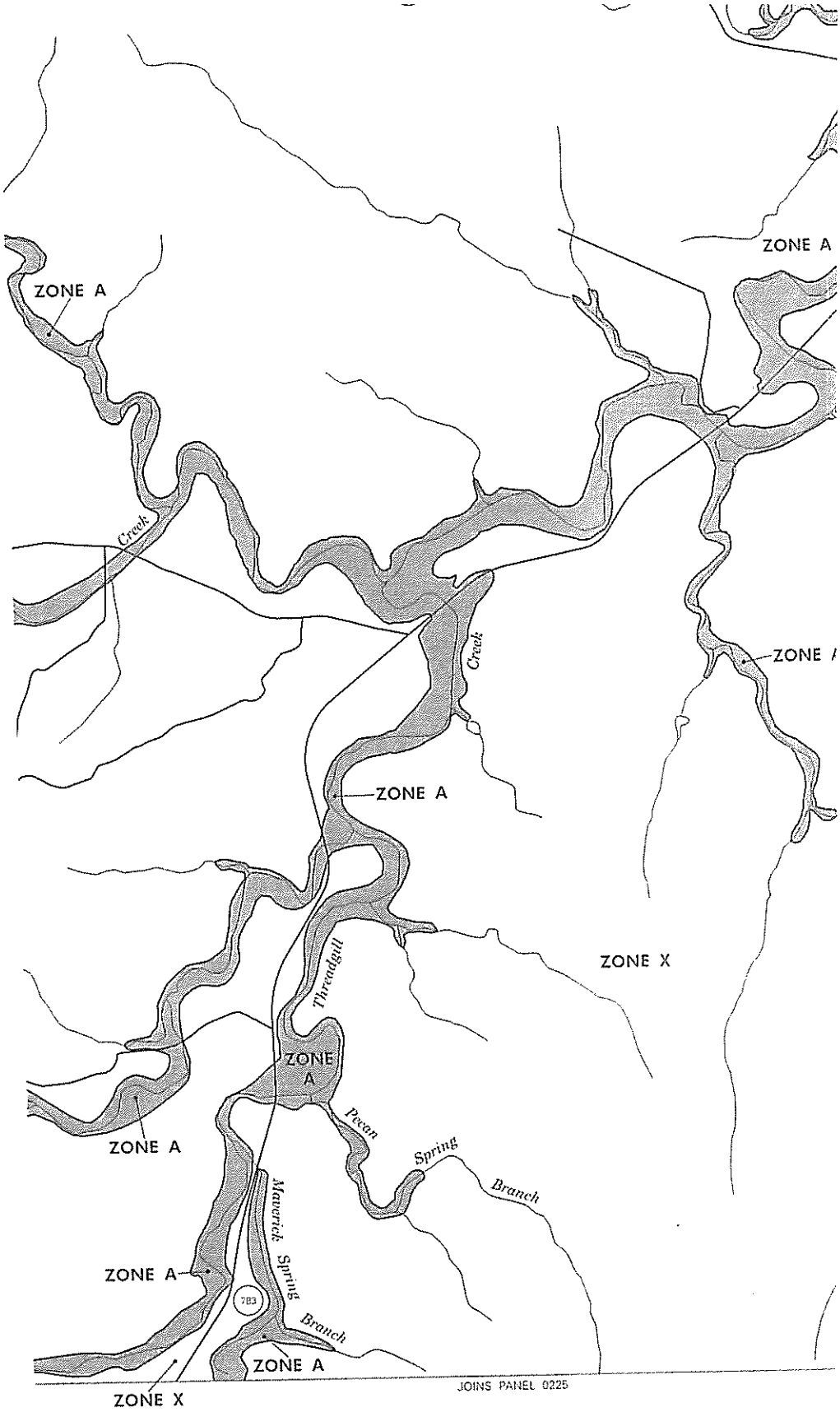
ZONE A
ZONE A
ZONE A
Creek
Creek
ZONE A
ZONE X
Threadgill
ZONE A
Pecan
Spring
Branch
ZONE A
Maverick Spring
Branch
783
ZONE A
ZONE A
ZONE X
JOINS PANEL 0225

TEXAS REALTORS

SELLER'S DISCLOSURE NOTICE

©Texas Association of REALTORS®, Inc. 2022

Section 5.008, Property Code requires a seller of residential property of not more than one dwelling unit to deliver a Seller's Disclosure Notice to a buyer on or before the effective date of a contract. **This form complies with and contains additional disclosures which exceed the minimum disclosures required by the Code.**

CONCERNING THE PROPERTY AT 9352 N RR 783 Harper , TX 78631 Casita

THIS NOTICE IS A DISCLOSURE OF SELLER'S KNOWLEDGE OF THE CONDITION OF THE PROPERTY AS OF THE DATE SIGNED BY SELLER AND IS NOT A SUBSTITUTE FOR ANY INSPECTIONS OR WARRANTIES THE BUYER MAY WISH TO OBTAIN. IT IS NOT A WARRANTY OF ANY KIND BY SELLER, SELLER'S AGENTS, OR ANY OTHER AGENT.

Seller __ is ✓ is not occupying the Property. If unoccupied (by Seller), how long since Seller has occupied the Property? __ it is a guest accomodation (approximate date) or __ never occupied the Property

Section 1. The Property has the items marked below: (Mark Yes (Y), No (N), or Unknown (U).)

This notice does not establish the items to be conveyed. The contract will determine which items will & will not convey.

Item	Y	N	U
Cable TV Wiring		X	
Carbon Monoxide Det.			X
Ceiling Fans	X		
Cooktop		X	
Dishwasher		X	
Disposal		X	
Emergency Escape Ladder(s)		X	
Exhaust Fans	X		
Fences	X		
Fire Detection Equip.		X	
French Drain			X
Gas Fixtures		X	
Liquid Propane Gas:		X	
-LP Community (Captive)		X	
-LP on Property	X	~~X~~ MEK	

Item	Y	N	U
Natural Gas Lines		X	
Fuel Gas Piping:		X	
-Black Iron Pipe			X
-Copper			X
-Corrugated Stainless Steel Tubing			X
Hot Tub		X	
Intercom System		X	
Microwave		X	
Outdoor Grill		X	
Patio/Decking	X		
Plumbing System	X		
Pool		X	
Pool Equipment		X	
Pool Maint. Accessories		X	
Pool Heater		X	

Item	Y	N	U
Pump: __ sump __ grinder		X	
Rain Gutters	X		
Range/Stove		X	
Roof/Attic Vents			X
Sauna		X	
Smoke Detector	X		
Smoke Detector - Hearing Impaired			X
Spa		X	
Trash Compactor		X	
TV Antenna		X	
Washer/Dryer Hookup		X	
Window Screens		X	
Public Sewer System		X	

Item	Y	N	U	Additional Information
Central A/C mini split	X			__ electric __ gas number of units:
Evaporative Coolers		X		number of units:
Wall/Window AC Units		X		number of units:
Attic Fan(s)		X		if yes, describe:
Central Heat mini split	X			__ electric __ gas number of units:
Other Heat		X		if yes, describe:
Oven		X		number of ovens: __ electric __ gas __ other:
Fireplace & Chimney		X		__ wood __ gas logs __ mock __ other:
Carport	X			__ attached __ not attached
Garage	X			__ attached __ not attached
Garage Door Openers	X			number of units: 1 number of remotes: 1
Satellite Dish & Controls		X		__ owned __ leased from:
Security System		X		__ owned __ leased from:

Casita

Concerning the Property at 9352 N RR 783 Harper , TX 78631

	Y	N	U	
Solar Panels		X		__ owned __ leased from:
Water Heater	X			X electric __ gas __ other: number of units:
Water Softener		X		__ owned __ leased from:
Other Leased Items(s)		X		if yes, describe:
Underground Lawn Sprinkler		X		__ automatic __ manual areas covered
Septic / On-Site Sewer Facility	X			if yes, attach Information About On-Site Sewer Facility (TXR-1407)

Water supply provided by: __ city X well __ MUD __ co-op __ unknown X other: Rainwater collection tank

Was the Property built before 1978? __ yes X no __ unknown

(If yes, complete, sign, and attach TXR-1906 concerning lead-based paint hazards).

Roof Type: metal Age: (approximate)

Is there an overlay roof covering on the Property (shingles or roof covering placed over existing shingles or roof covering)? __ yes __ no X unknown

Are you (Seller) aware of any of the items listed in this Section 1 that are not in working condition, that have defects, or are need of repair? __ yes X no If yes, describe (attach additional sheets if necessary):

Section 2. Are you (Seller) aware of any defects or malfunctions in any of the following? (Mark Yes (Y) if you are aware and No (N) if you are not aware.)

Item	Y	N	Item	Y	N	Item	Y	N
Basement		X	Floors		X	Sidewalks		X
Ceilings		X	Foundation / Slab(s)		X	Walls / Fences		X
Doors		X	Interior Walls		X	Windows		X
Driveways		X	Lighting Fixtures		X	Other Structural Components		X
Electrical Systems		X	Plumbing Systems		X			
Exterior Walls		X	Roof		X			

If the answer to any of the items in Section 2 is yes, explain (attach additional sheets if necessary):

Section 3. Are you (Seller) aware of any of the following conditions? (Mark Yes (Y) if you are aware and No (N) if you are not aware.)

Condition	Y	N	Condition	Y	N
Aluminum Wiring		X	Radon Gas		X
Asbestos Components		X	Settling		X
Diseased Trees: X oak wilt	X		Soil Movement		X
Endangered Species/Habitat on Property		X	Subsurface Structure or Pits		X
Fault Lines		X	Underground Storage Tanks		X
Hazardous or Toxic Waste		X	Unplatted Easements		X
Improper Drainage		X	Unrecorded Easements		X
Intermittent or Weather Springs		X	Urea-formaldehyde Insulation		X
Landfill		X	Water Damage Not Due to a Flood Event		X
Lead-Based Paint or Lead-Based Pt. Hazards		X	Wetlands on Property		X
Encroachments onto the Property		X	Wood Rot		X
Improvements encroaching on others' property		X	Active infestation of termites or other wood destroying insects (WDI)		X
Located in Historic District		X	Previous treatment for termites or WDI		X
Historic Property Designation		X	Previous termite or WDI damage repaired		X
Previous Foundation Repairs		X	Previous Fires		X

Casita

Concerning the Property at 9352 N RR 783 Harper , TX 78631

	Y	N
Previous Roof Repairs		X
Previous Other Structural Repairs		X
Previous Use of Premises for Manufacture of Methamphetamine		X

Termite or WDI damage needing repair		X
Single Blockable Main Drain in Pool/Hot Tub/Spa*		X

If the answer to any of the items in Section 3 is yes, explain (attach additional sheets if necessary): _____

*A single blockable main drain may cause a suction entrapment hazard for an individual.

Section 4. Are you (Seller) aware of any item, equipment, or system in or on the Property that is in need of repair, which has not been previously disclosed in this notice? __ yes X no If yes, explain (attach additional sheets if necessary): _____

Section 5. Are you (Seller) aware of any of the following conditions?* (Mark Yes (Y) if you are aware and check wholly or partly as applicable. Mark No (N) if you are not aware.)

Y	N	
__	X	Present flood insurance coverage.
__	X	Previous flooding due to a failure or breach of a reservoir or a controlled or emergency release of water from a reservoir.
__	X	Previous flooding due to a natural flood event.
__	X	Previous water penetration into a structure on the Property due to a natural flood.
__	X	Located __ wholly __ partly in a 100-year floodplain (Special Flood Hazard Area-Zone A, V, A99, AE, AO, AH, VE, or AR).
__	X	Located __ wholly __ partly in a 500-year floodplain (Moderate Flood Hazard Area-Zone X (shaded)).
__	X	Located __ wholly __ partly in a floodway.
__	X	Located __ wholly __ partly in a flood pool.
__	X	Located __ wholly __ partly in a reservoir.

If the answer to any of the above is yes, explain (attach additional sheets as necessary): _____

If Buyer is concerned about these matters, Buyer may consult Information About Flood Hazards (TXR 1414).

For purposes of this notice:

"100-year floodplain" means any area of land that: (A) is identified on the flood insurance rate map as a special flood hazard area, which is designated as Zone A, V, A99, AE, AO, AH, VE, or AR on the map; (B) has a one percent annual chance of flooding, which is considered to be a high risk of flooding; and (C) may include a regulatory floodway, flood pool, or reservoir.

"500-year floodplain" means any area of land that: (A) is identified on the flood insurance rate map as a moderate flood hazard area, which is designated on the map as Zone X (shaded); and (B) has a two-tenths of one percent annual chance of flooding, which is considered to be a moderate risk of flooding.

"Flood pool" means the area adjacent to a reservoir that lies above the normal maximum operating level of the reservoir and that is subject to controlled inundation under the management of the United States Army Corps of Engineers.

Casita

Concerning the Property at 9352 N RR 783 Harper , TX 78631

"Flood insurance rate map" means the most recent flood hazard map published by the Federal Emergency Management Agency under the National Flood Insurance Act of 1968 (42 U.S.C. Section 4001 et seq.).

"Floodway" means an area that is identified on the flood insurance rate map as a regulatory floodway, which includes the channel of a river or other watercourse and the adjacent land areas that must be reserved for the discharge of a base flood, also referred to as a 100-year flood, without cumulatively increasing the water surface elevation more than a designated height.

"Reservoir" means a water impoundment project operated by the United States Army Corps of Engineers that is intended to retain water or delay the runoff of water in a designated surface area of land.

Section 6. Have you (Seller) ever filed a claim for flood damage to the Property with any insurance provider, including the National Flood Insurance Program (NFIP)?* __ yes X no If yes, explain (attach additional sheets as necessary): _____

*Homes in high risk flood zones with mortgages from federally regulated or insured lenders are required to have flood insurance. Even when not required, the Federal Emergency Management Agency (FEMA) encourages homeowners in high risk, moderate risk, and low risk flood zones to purchase flood insurance that covers the structure(s) and the personal property within the structure(s).

Section 7. Have you (Seller) ever received assistance from FEMA or the U.S. Small Business Administration (SBA) for flood damage to the Property? __ yes X no If yes, explain (attach additional sheets as necessary): _____

Section 8. Are you (Seller) aware of any of the following? (Mark Yes (Y) if you are aware. Mark No (N) if you are not aware.)

Y	N	
__	X	Room additions, structural modifications, or other alterations or repairs made without necessary permits, with unresolved permits, or not in compliance with building codes in effect at the time.
__	X	Homeowners' associations or maintenance fees or assessments. If yes, complete the following: Name of association: _____ Manager's name: _____ Phone: _____ Fees or assessments are: $ _____ per _____ and are: __ mandatory __ voluntary Any unpaid fees or assessment for the Property? __ yes ($ _____) __ no If the Property is in more than one association, provide information about the other associations below or attach information to this notice.
__	X	Any common area (facilities such as pools, tennis courts, walkways, or other) co-owned in undivided interest with others. If yes, complete the following: Any optional user fees for common facilities charged? __ yes __ no If yes, describe: _____
__	X	Any notices of violations of deed restrictions or governmental ordinances affecting the condition or use of the Property.
__	X	Any lawsuits or other legal proceedings directly or indirectly affecting the Property. (Includes, but is not limited to: divorce, foreclosure, heirship, bankruptcy, and taxes.)
__	X	Any death on the Property except for those deaths caused by: natural causes, suicide, or accident unrelated to the condition of the Property.
__	X	Any condition on the Property which materially affects the health or safety of an individual.
__	X	Any repairs or treatments, other than routine maintenance, made to the Property to remediate environmental hazards such as asbestos, radon, lead-based paint, urea-formaldehyde, or mold. If yes, attach any certificates or other documentation identifying the extent of the remediation (for example, certificate of mold remediation or other remediation).
X	__	Any rainwater harvesting system located on the Property that is larger than 500 gallons and that uses a public water supply as an auxiliary water source.

Casita

Concerning the Property at 9352 N RR 783 Harper , TX 78631

__ X The Property is located in a propane gas system service area owned by a propane distribution system retailer.

__ X Any portion of the Property that is located in a groundwater conservation district or a subsidence district.

If the answer to any of the items in Section 8 is yes, explain (attach additional sheets if necessary): 20,000 gallon rain water collection tank installed 2022. Has UV light purification. Installed + serviced by Aqua Doc Well Service, Harper, TX.

Section 9. Within the last 4 years, have you (Seller) received any written inspection reports from persons who regularly provide inspections and who are either licensed as inspectors or otherwise permitted by law to perform inspections? X yes __ no If yes, attach copies and complete the following:

Inspection Date	Type	Name of Inspector	No. of Pages
7-14-2025	Real Estate	Benjamin Feuge	25

Note: A buyer should not rely on the above-cited reports as a reflection of the current condition of the Property. A buyer should obtain inspections from inspectors chosen by the buyer.

Section 10. Check any tax exemption(s) which you (Seller) currently claim for the Property:

__ Homestead __ Senior Citizen __ Disabled
__ Wildlife Management X Agricultural Same as Main __ Disabled Veteran
__ Other: _____ __ Unknown

Section 11. Have you (Seller) ever filed a claim for damage, other than flood damage, to the Property with any insurance provider? __ yes X no

Section 12. Have you (Seller) ever received proceeds for a claim for damage to the Property (for example, an insurance claim or a settlement or award in a legal proceeding) and not used the proceeds to make the repairs for which the claim was made? __ yes X no If yes, explain: _____

Section 13. Does the Property have working smoke detectors installed in accordance with the smoke detector requirements of Chapter 766 of the Health and Safety Code?* X unknown __ no __ yes. If no or unknown, explain. (Attach additional sheets if necessary): Unfamiliar with that Code.

**Chapter 766 of the Health and Safety Code requires one-family or two-family dwellings to have working smoke detectors installed in accordance with the requirements of the building code in effect in the area in which the dwelling is located, including performance, location, and power source requirements. If you do not know the building code requirements in effect in your area, you may check unknown above or contact your local building official for more information.*

A buyer may require a seller to install smoke detectors for the hearing impaired if: (1) the buyer or a member of the buyer's family who will reside in the dwelling is hearing-impaired; (2) the buyer gives the seller written evidence of the hearing impairment from a licensed physician; and (3) within 10 days after the effective date, the buyer makes a written request for the seller to install smoke detectors for the hearing-impaired and specifies the locations for installation. The parties may agree who will bear the cost of installing the smoke detectors and which brand of smoke detectors to install.

Concerning the Property at 9352 N RR 783
Harper , TX 78631

Seller acknowledges that the statements in this notice are true to the best of Seller's belief and that no person, including the broker(s), has instructed or influenced Seller to provide inaccurate information or to omit any material information.

Mary E Kochelek, Trustee 7/31/2025

Signature of Seller Date Signature of Seller Date

Printed Name: Mary E Kochelek, Trustee Printed Name: _____

ADDITIONAL NOTICES TO BUYER:

(1) The Texas Department of Public Safety maintains a database that the public may search, at no cost, to determine if registered sex offenders are located in certain zip code areas. To search the database, visit https://publicsite.dps.texas.gov. For information concerning past criminal activity in certain areas or neighborhoods, contact the local police department.

(2) If the Property is located in a coastal area that is seaward of the Gulf Intracoastal Waterway or within 1,000 feet of the mean high tide bordering the Gulf of Mexico, the Property may be subject to the Open Beaches Act or the Dune Protection Act (Chapter 61 or 63, Natural Resources Code, respectively) and a beachfront construction certificate or dune protection permit may be required for repairs or improvements. Contact the local government with ordinance authority over construction adjacent to public beaches for more information.

(3) If the Property is located in a seacoast territory of this state designated as a catastrophe area by the Commissioner of the Texas Department of Insurance, the Property may be subject to additional requirements to obtain or continue windstorm and hail insurance. A certificate of compliance may be required for repairs or improvements to the Property. For more information, please review *Information Regarding Windstorm and Hail Insurance for Certain Properties* (TXR 2518) and contact the Texas Department of Insurance or the Texas Windstorm Insurance Association.

(4) This Property may be located near a military installation and may be affected by high noise or air installation compatible use zones or other operations. Information relating to high noise and compatible use zones is available in the most recent Air Installation Compatible Use Zone Study or Joint Land Use Study prepared for a military installation and may be accessed on the Internet website of the military installation and of the county and any municipality in which the military installation is located.

(5) If you are basing your offers on square footage, measurements, or boundaries, you should have those items independently measured to verify any reported information.

(6) The following providers currently provide service to the Property: See Main House Disclosure

Electric: _____ phone #: _____

Sewer: _____ phone #: _____

Water: _____ phone #: _____

Cable: _____ phone #: _____

Trash: _____ phone #: _____

Natural Gas: _____ phone #: _____

Phone Company: _____ phone #: _____

Propane: _____ phone #: _____

Internet: _____ phone #: _____

TEXAS REALTORS

INFORMATION ABOUT ON-SITE SEWER FACILITY

USE OF THIS FORM BY PERSONS WHO ARE NOT MEMBERS OF THE TEXAS FORMSOURCE IS NOT AUTHORIZED.
©Texas Association of REALTORS®, Inc., 2004

Guest House

CONCERNING THE PROPERTY AT 9352 N RR 783 Harper , TX 78631

A. DESCRIPTION OF ON-SITE SEWER FACILITY ON PROPERTY:

(1) Type of Treatment System: [x] Septic Tank [ ] Aerobic Treatment [ ] Unknown
[ ] _____

(2) Type of Distribution System: Drain Field Leaching Chambers [ ] Unknown

(3) Approximate Location of Drain Field or Distribution System: _____ [ ] Unknown
West of the Guest House

(4) Installer: Allen Tatsch [ ] Unknown

(5) Approximate Age: 10 years [ ] Unknown

B. MAINTENANCE INFORMATION:

(1) Is Seller aware of any maintenance contract in effect for the on-site sewer facility? [ ] Yes [x] No
If yes, name of maintenance contractor: _____
Phone: _____ contract expiration date: _____
Maintenance contracts must be in effect to operate aerobic treatment and certain non-standard" on-site sewer facilities.)

(2) Approximate date any tanks were last pumped? October 2020

(3) Is Seller aware of any defect or malfunction in the on-site sewer facility? [ ] Yes [X] No
If yes, explain: _____

(4) Does Seller have manufacturer or warranty information available for review? [ ] Yes [X] No

C. PLANNING MATERIALS, PERMITS, AND CONTRACTS:

(1) The following items concerning the on-site sewer facility are attached:
[ ] planning materials [x] permit for original installation [x] final inspection when OSSF was installed
[ ] maintenance contract [ ] manufacturer information [ ] warranty information [ ] _____
750/2c Serial # 9515 Block Concrete Tank

(2) "Planning materials" are the supporting materials that describe the on-site sewer facility that are submitted to the permitting authority in order to obtain a permit to install the on-site sewer facility.

(3) **It may be necessary for a buyer to have the permit to operate an on-site sewer facility transferred to the buyer.**

This form is for the exclusive use of the subscriber named below. Any use by others is strictly prohibited. Use of this form does not indicate membership in Texas REALTORS®.
Fredericksburg Realty, 257 West Main Street Fredericksburg TX 78624 Phone: (830) 998-2896 Fax: 9352 N RR 783
Justin Cop
Produced with Lone Wolf Transactions (zipForm Edition) 717 N Harwood St, Suite 2200, Dallas, TX 75201 www.lwolf.com

D. INFORMATION FROM GOVERNMENTAL AGENCIES: Pamphlets describing on-site sewer facilities are available from the Texas Agricultural Extension Service. Information in the following table was obtained from Texas Commission on Environmental Quality (TCEQ) on 10/24/2002. The table estimates daily wastewater usage rates. Actual water usage data or other methods for calculating may be used if accurate and acceptable to TCEQ.

Facility	Usage (gal/day) without water-saving devices	Usage (gal/day) with water-saving devices
Single family dwelling (1-2 bedrooms; less than 1,500 sf)	225	180
Single family dwelling (3 bedrooms; less than 2,500 sf)	300	240
Single family dwelling (4 bedrooms; less than 3,500 sf)	375	300
Single family dwelling (5 bedrooms; less than 4,500 sf)	450	360
Single family dwelling (6 bedrooms; less than 5,500 sf)	525	420
Mobile home, condo, or townhouse (1-2 bedroom)	225	180
Mobile home, condo, or townhouse (each add'l bedroom)	75	60

This document is not a substitute for any inspections or warranties. This document was completed to the best of Seller's knowledge and belief on the date signed. Seller and real estate agents are not experts about on-site sewer facilities. Buyer is encouraged to have the on-site sewer facility inspected by an inspector of Buyer's choice.

Mary E Kochelek 7/31/2025

Signature of Seller Date
Mary E Kochelek

Signature of Seller Date

Receipt acknowledged by:

Signature of Buyer Date

Signature of Buyer Date

Produced with Lone Wolf Transactions (zipForm Edition) 717 N Harwood St, Suite 2200, Dallas, TX 75201 www.lwolf.com 9352 N RR 783

Dwayn Boos
On-Site Sewage Facilities
101 W Main St, Mail Unit #9
Fredericksburg, TX 78624

NOTICE OF APPROVAL OF
On-Site Sewage Facility

David F Ramirez
218 Farne Castle
San Antonio, TX 78249

PERMIT # 7010

Property Location: 9352 Unit C N Ranch Road 783

GILLESPIE COUNTY, TEXAS

This serves to notify all persons that the on-site sewage facility owned by the above has satisfied design, construction, and installation requirements of the Texas Commission on Environmental Quality (TCEQ) and Gillespie County. This Gillespie County On-Site Sewage Facility Permit is issued for the operation of the above-identified on-site sewage facility.

ANY MODIFICATIONS TO THE STRUCTURE, SYSTEM COMPONENTS, OR CHANGES OF OWNERSHIP MAY REQUIRE A NEW PERMIT. The owner must notify this office of the aforementioned changes.

Addition Information:

100 GPD = 1BR APT

Dwayn C Boos

Inspector and Gillespie County Designated Representative
Dwayn C Boos DR OS0011257

Nov 13, 2015

Date

3

***Email Mandatory dramirez50@sbcglobal.net

Gillespie County Application for On-Site Sewage Facility

(Permit application is good for 1year from purchase date)

Permit # 7010 Date: 11/3/15 Fee: 150

Reason for Permit (Circle one): New Construction System Replacement System Repair

Name of Landowner: Ramirez (Last), David (First), F (MI)

Mailing Address: 218 Farne Castle (Street # and name), San Antonio Tx (City & State), 78249 (Zip code)

Physical Address/Location of new septic system: 9352 C. N. RR 783 (Street # and name)

Harper Tx (City & State), 78631 (Zip code)

Daytime Phone Number(s): 210 857 9553 Cell Number(s): _____

Legal Description: Volume: 361 Page: 328-330 Gillespie County Tax I. D. # : R5164

Subdivision Name: _____ Lot____ Blk____ Phase____ Tract____

Abstract # 6410 Survey Name and # alejandro San Miguel #310

Total Acreage: 84 ☑ Private Well ☐ Public Well (Supplier's Name)_____

Name & license # of person installing the septic system: Allen Tatsch 0021088 (OS#)

Information on a Single Family Residence: ☐ House ☐ Mobile Home ☐ Manufactured

Total Square Footage of Living Area: ☐ <1500 ☐ <2500 ☐ <3500 ☐ <4500 ☑ 800

# of bedrooms 1, # of bathrooms (Full) 1 (Half)____. Does it have or will it have water saving devices such as, low flush toilets, reduced flow shower heads or faucets, pressure reducing valves and/or faucet aerators? ✓ Yes ___ No Water Softener (Demand-Initiated Regeneration) Circle: Y or (N)

Is the water softener plumbed separate from the OSSF: Y or N

Information on a Non-Single Family Residence or Commercial/Institutional Facility (including Multi-family residences) Describe usage: 1 Bdrm Apartment in Barn

I certify that the above statements are true and correct to the best of my knowledge. Authorization is hereby given to Gillespie County OSSF Department to enter upon the above described property for the purpose of soil/site evaluation and investigation of an on-site sewage facility.

David & Amelia Ramirez (Signature of Landowner) 10.31.15 (Date)

Office use only:

Daily wastewater usage rate: Q= 100 (gallons/day)

☐ Site Evaluation

☑ Planning Materials submitted by: ☑ Installer ☐ P. E. ☐ R. S.

☐ Development Plans required for Subdivisions, Manufactured Housing Communities, Multi-Unit Residential Development, Business Parks, or other similar uses (i.e. B&B Rental, R. V. Park)

☑ Floodplain 437-04

For Aerobic Treatment units and non-standard treatment (if applicable):

☐ *Affidavit to the Public*

☐ Two-year maintenance contract

☑ AUTHORIZATION to CONSTRUCT Date: Nov. 5, 2015

Certification of Approval

Final Inspection Permit # 7010

Date: Nov 13, 2015 Approved by: Dwayne C Boots

I. Sewer (House Drain): ☐ 3" Sch 40 ☑ 4" Sch 40 ☐ Other:
Slope of sewer pipe to tank: ☑ minimum of 1/8"/ft.
☑ Cleanouts every 50 ft. and within 5 ft. of 90° bends

II. Treatment: ☑ Conventional Tanks ☐ Aerobic ☐ Other:

TANKS SIZE AND COMPARTMENTS	SERIAL#	RISER	MANUFACTURER
1. 750/2c	9515	Y/N	Block Creek Concrete Prod
2.		Y/N	
3.		Y/N	
4.		Y/N	

III. Disposal Field: ☐ Conventional Gravel ☑ Leaching Chambers (Brand) Bio Diffuser
☐ Low-Pressure Pipe ☐ Mounds ☐ Gravel-Less Pipe ☐ Pressure Emitters (drip)
☐ ET Beds ☐ Other:

Subsurface Disposal:

LENGTH OF TRENCH	WIDTH	HEIGHT OF MEDIA	CREDIT	SQUARE FEET AREA–LENGTH X CREDIT
1. 75 ft.	3 ft.	1 ft.	5 ft.	375 Sq. ft.
2. ft.	ft.	ft.	ft.	Sq. ft.

IV. Surface Disposal (Application):
Loading Rate: Area Required in Sq. ft.
Area Designed in Sq. ft.

Timer installed——Y/N
Anti-siphon Hole used——Y/N
Check valve used——Y/N

V. Map of System: GPS UTM 14 R
Not to Scale

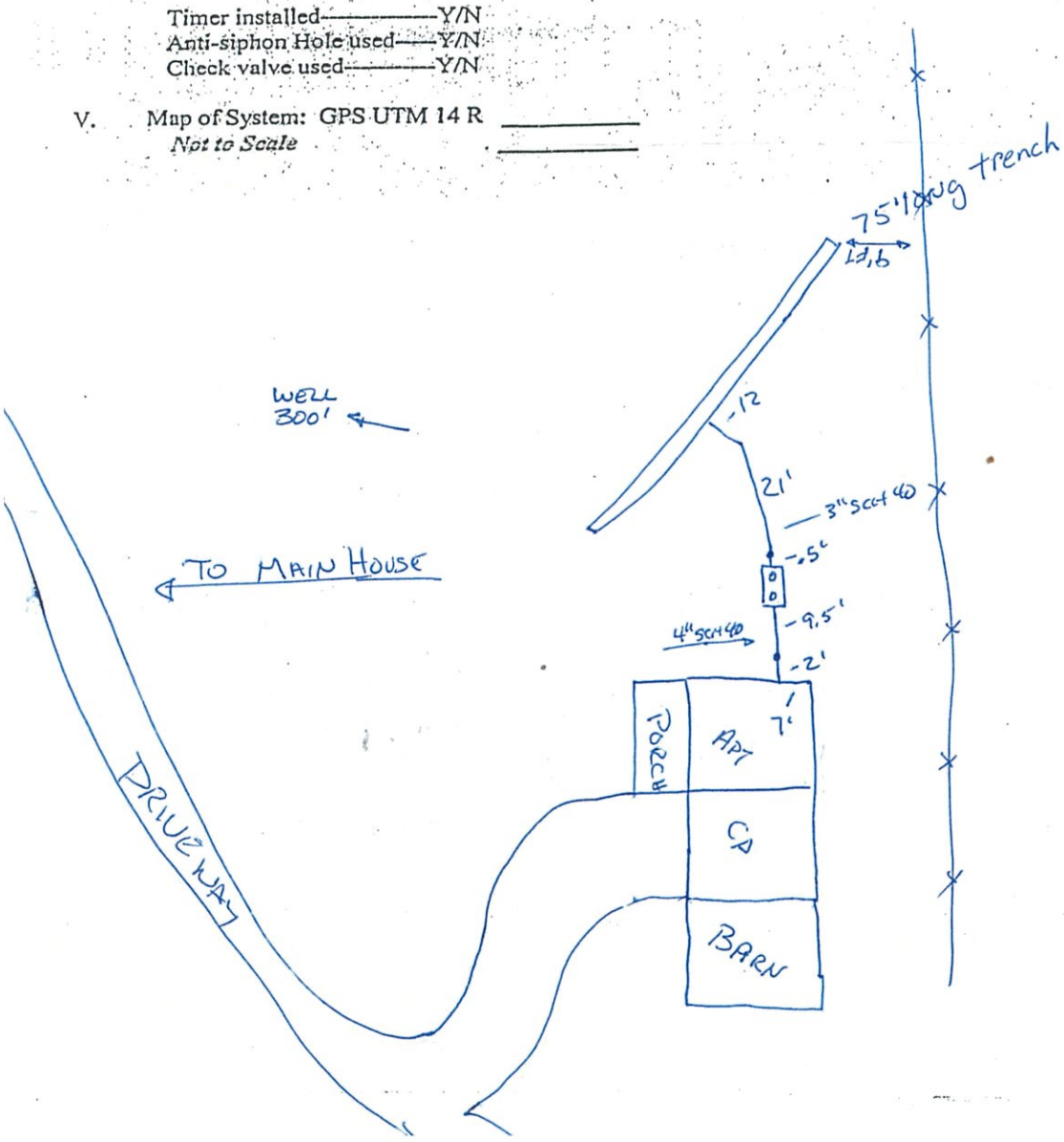

David Ramirez
9352 N RR 783
Harper Tx 78631
(210) (857) 9553

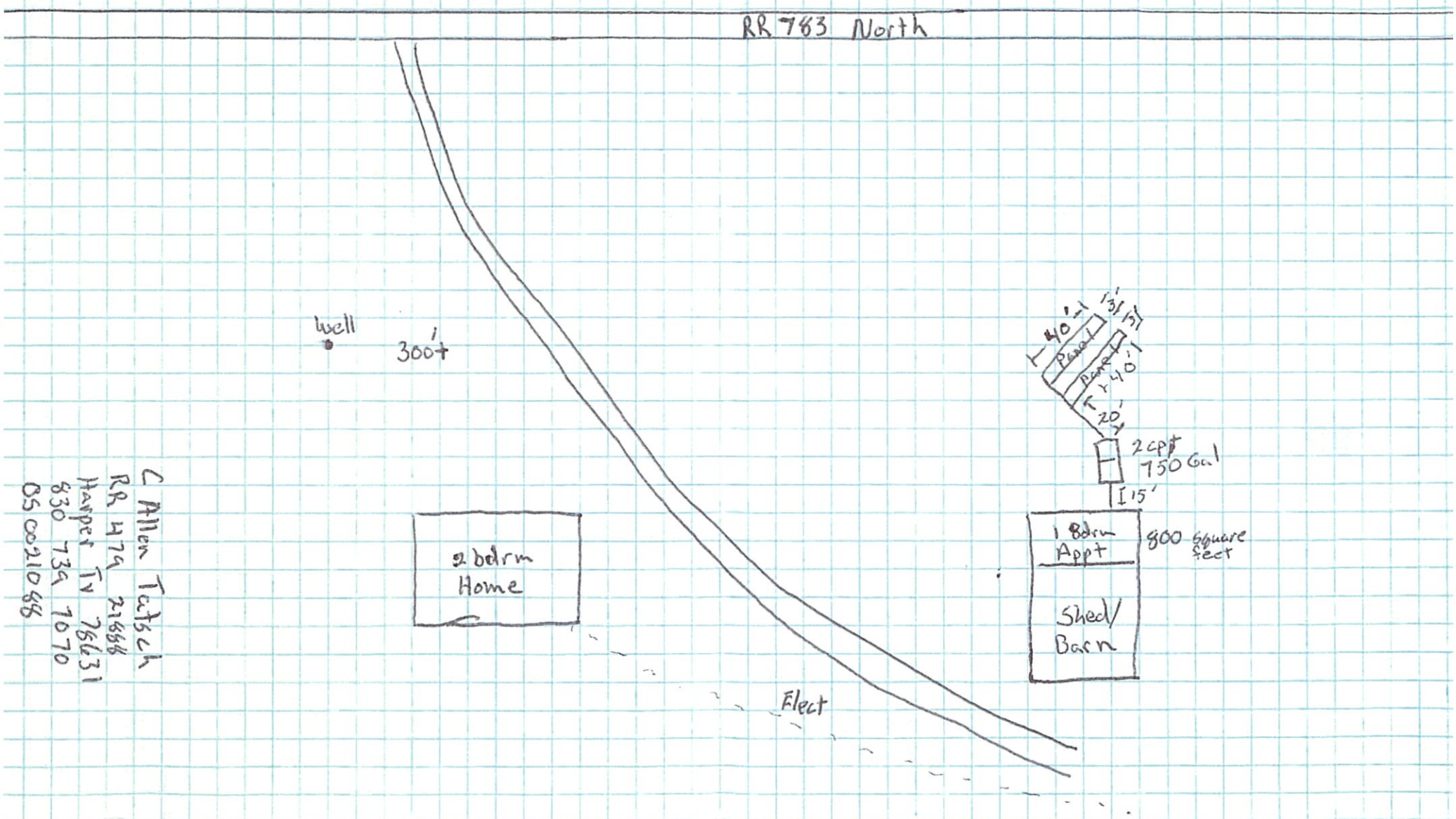

C Allen Tatsch
RR 479 21888
Harper Tx 78631
830 739 7070
05 00210 88

TEXAS REALTORS

SELLER'S DISCLOSURE NOTICE

©Texas Association of REALTORS®, Inc. 2022

Section 5.008, Property Code requires a seller of residential property of not more than one dwelling unit to deliver a Seller's Disclosure Notice to a buyer on or before the effective date of a contract. **This form complies with and contains additional disclosures which exceed the minimum disclosures required by the Code.**

CONCERNING THE PROPERTY AT 9352 N RR 783 Harper , TX 78631 Barn Apartment

THIS NOTICE IS A DISCLOSURE OF SELLER'S KNOWLEDGE OF THE CONDITION OF THE PROPERTY AS OF THE DATE SIGNED BY SELLER AND IS NOT A SUBSTITUTE FOR ANY INSPECTIONS OR WARRANTIES THE BUYER MAY WISH TO OBTAIN. IT IS NOT A WARRANTY OF ANY KIND BY SELLER, SELLER'S AGENTS, OR ANY OTHER AGENT.

Seller __ is X is not occupying the Property. If unoccupied (by Seller), how long since Seller has occupied the Property? __ It is a guest property (approximate date) or __ never occupied the Property

Section 1. The Property has the items marked below: (Mark Yes (Y), No (N), or Unknown (U).)

This notice does not establish the items to be conveyed. The contract will determine which items will & will not convey.

Item	Y	N	U
Cable TV Wiring			X
Carbon Monoxide Det.			X
Ceiling Fans	X		
Cooktop		X	
Dishwasher		X	
Disposal		X	
Emergency Escape Ladder(s)		X	
Exhaust Fans	X		
Fences	X		
Fire Detection Equip. MCK		X	
French Drain			X
Gas Fixtures		X	MCK
Liquid Propane Gas:		X	
-LP Community (Captive)		X	
-LP on Property	X	MCK	

Item	Y	N	U
Natural Gas Lines		X	
Fuel Gas Piping:		X	
-Black Iron Pipe			X
-Copper			X
-Corrugated Stainless Steel Tubing			X
Hot Tub		X	
Intercom System		X	
Microwave	X		
Outdoor Grill		X	
Patio/Decking	X		
Plumbing System	X		
Pool		X	
Pool Equipment		X	
Pool Maint. Accessories		X	
Pool Heater		X	

Item	Y	N	U
Pump: __ sump __ grinder		X	
Rain Gutters		X	
Range/Stove		X	
Roof/Attic Vents			X
Sauna		X	
Smoke Detector	X		
Smoke Detector - Hearing Impaired			X
Spa		X	
Trash Compactor		X	
TV Antenna			X
Washer/Dryer Hookup		X	
Window Screens		X	
Public Sewer System		X	

Item	Y	N	U	Additional Information
~~Central~~ A/C mini split	X			X electric __ gas number of units:
Evaporative Coolers		X		number of units:
Wall/Window AC Units		X		number of units:
Attic Fan(s)			X	if yes, describe:
Central Heat		X		__ electric __ gas number of units:
Other Heat mini split	X			if yes, describe: mini split (electric)
Oven		X		number of ovens: __ electric __ gas __ other:
Fireplace & Chimney		X		__ wood __ gas logs __ mock __ other:
Carport		X		__ attached __ not attached
Garage		X		__ attached __ not attached
Garage Door Openers		X		number of units: number of remotes:
Satellite Dish & Controls		X		__ owned __ leased from:
Security System		X		__ owned __ leased from:

Concerning the Property at 9352 N RR 783 Harper , TX 78631

	Y	N	U	
Solar Panels		X		__ owned __ leased from:
Water Heater	X			X electric __ gas __ other: number of units: 1
Water Softener		X		__ owned __ leased from:
Other Leased Items(s)		X		if yes, describe:
Underground Lawn Sprinkler		X		__ automatic __ manual areas covered
Septic / On-Site Sewer Facility	X			if yes, attach Information About On-Site Sewer Facility (TXR-1407)

Water supply provided by: __ city X well __ MUD __ co-op __ unknown __ other:

Was the Property built before 1978? __ yes X no __ unknown

(If yes, complete, sign, and attach TXR-1906 concerning lead-based paint hazards).

Roof Type: metal Age: 18 yrs (approximate)

Is there an overlay roof covering on the Property (shingles or roof covering placed over existing shingles or roof covering)? __ yes __ no X unknown

Are you (Seller) aware of any of the items listed in this Section 1 that are not in working condition, that have defects, or are need of repair? __ yes X no If yes, describe (attach additional sheets if necessary):

Section 2. Are you (Seller) aware of any defects or malfunctions in any of the following? (Mark Yes (Y) if you are aware and No (N) if you are not aware.)

Item	Y	N
Basement		X
Ceilings		X
Doors		X
Driveways		X
Electrical Systems		X
Exterior Walls		X

Item	Y	N
Floors		X
Foundation / Slab(s)		X
Interior Walls		X
Lighting Fixtures		X
Plumbing Systems		X
Roof		X

Item	Y	N
Sidewalks		X
Walls / Fences		X
Windows		X
Other Structural Components		X

If the answer to any of the items in Section 2 is yes, explain (attach additional sheets if necessary):

Section 3. Are you (Seller) aware of any of the following conditions? (Mark Yes (Y) if you are aware and No (N) if you are not aware.)

Condition	Y	N
Aluminum Wiring		X
Asbestos Components		X
Diseased Trees: __ oak wilt	X	
Endangered Species/Habitat on Property		X
Fault Lines		X
Hazardous or Toxic Waste		X
Improper Drainage		X
Intermittent or Weather Springs		X
Landfill		X
Lead-Based Paint or Lead-Based Pt. Hazards		X
Encroachments onto the Property		X
Improvements encroaching on others' property		X
Located in Historic District		X
Historic Property Designation		X
Previous Foundation Repairs		X

Condition	Y	N
Radon Gas		X
Settling		X
Soil Movement		X
Subsurface Structure or Pits		X
Underground Storage Tanks		X
Unplatted Easements		X
Unrecorded Easements		X
Urea-formaldehyde Insulation		X
Water Damage Not Due to a Flood Event		X
Wetlands on Property		X
Wood Rot		X
Active infestation of termites or other wood destroying insects (WDI)		X
Previous treatment for termites or WDI		X
Previous termite or WDI damage repaired		X
Previous Fires		X

Concerning the Property at 9352 N RR 783 Harper , TX 78631

	Y	N	U
Previous Roof Repairs		X	
Previous Other Structural Repairs		X	X
Previous Use of Premises for Manufacture of Methamphetamine		X	X

	Y	N	U
Termite or WDI damage needing repair			X
Single Blockable Main Drain in Pool/Hot Tub/Spa*		X	X

If the answer to any of the items in Section 3 is yes, explain (attach additional sheets if necessary): _____

*A single blockable main drain may cause a suction entrapment hazard for an individual.

Section 4. Are you (Seller) aware of any item, equipment, or system in or on the Property that is in need of repair, which has not been previously disclosed in this notice? __ yes X no If yes, explain (attach additional sheets if necessary): _____

Section 5. Are you (Seller) aware of any of the following conditions?* (Mark Yes (Y) if you are aware and check wholly or partly as applicable. Mark No (N) if you are not aware.)

Y	N	
__	X	Present flood insurance coverage.
__	X	Previous flooding due to a failure or breach of a reservoir or a controlled or emergency release of water from a reservoir.
__	X	Previous flooding due to a natural flood event.
__	X	Previous water penetration into a structure on the Property due to a natural flood.
__	X	Located __ wholly __ partly in a 100-year floodplain (Special Flood Hazard Area-Zone A, V, A99, AE, AO, AH, VE, or AR).
__	X	Located __ wholly __ partly in a 500-year floodplain (Moderate Flood Hazard Area-Zone X (shaded)).
__	X	Located __ wholly __ partly in a floodway.
__	X	Located __ wholly __ partly in a flood pool.
__	X	Located __ wholly __ partly in a reservoir.

If the answer to any of the above is yes, explain (attach additional sheets as necessary): _____

If Buyer is concerned about these matters, Buyer may consult Information About Flood Hazards (TXR 1414).

For purposes of this notice:

"100-year floodplain" means any area of land that: (A) is identified on the flood insurance rate map as a special flood hazard area, which is designated as Zone A, V, A99, AE, AO, AH, VE, or AR on the map; (B) has a one percent annual chance of flooding, which is considered to be a high risk of flooding; and (C) may include a regulatory floodway, flood pool, or reservoir.

"500-year floodplain" means any area of land that: (A) is identified on the flood insurance rate map as a moderate flood hazard area, which is designated on the map as Zone X (shaded); and (B) has a two-tenths of one percent annual chance of flooding, which is considered to be a moderate risk of flooding.

"Flood pool" means the area adjacent to a reservoir that lies above the normal maximum operating level of the reservoir and that is subject to controlled inundation under the management of the United States Army Corps of Engineers.

"Flood insurance rate map" means the most recent flood hazard map published by the Federal Emergency Management Agency under the National Flood Insurance Act of 1968 (42 U.S.C. Section 4001 et seq.).

"Floodway" means an area that is identified on the flood insurance rate map as a regulatory floodway, which includes the channel of a river or other watercourse and the adjacent land areas that must be reserved for the discharge of a base flood, also referred to as a 100-year flood, without cumulatively increasing the water surface elevation more than a designated height.

"Reservoir" means a water impoundment project operated by the United States Army Corps of Engineers that is intended to retain water or delay the runoff of water in a designated surface area of land.

Section 6. Have you (Seller) ever filed a claim for flood damage to the Property with any insurance provider, including the National Flood Insurance Program (NFIP)?* __ yes X no If yes, explain (attach additional sheets as necessary): _____

*Homes in high risk flood zones with mortgages from federally regulated or insured lenders are required to have flood insurance. Even when not required, the Federal Emergency Management Agency (FEMA) encourages homeowners in high risk, moderate risk, and low risk flood zones to purchase flood insurance that covers the structure(s) and the personal property within the structure(s).

Section 7. Have you (Seller) ever received assistance from FEMA or the U.S. Small Business Administration (SBA) for flood damage to the Property? __ yes X no If yes, explain (attach additional sheets as necessary): _____

Section 8. Are you (Seller) aware of any of the following? (Mark Yes (Y) if you are aware. Mark No (N) if you are not aware.)

Y	N	
__	X	Room additions, structural modifications, or other alterations or repairs made without necessary permits, with unresolved permits, or not in compliance with building codes in effect at the time.
__	X	Homeowners' associations or maintenance fees or assessments. If yes, complete the following: Name of association: _____ Manager's name: _____ Phone: _____ Fees or assessments are: $ _____ per _____ and are: __ mandatory __ voluntary Any unpaid fees or assessment for the Property? __ yes ($ _____) __ no If the Property is in more than one association, provide information about the other associations below or attach information to this notice.
__	X	Any common area (facilities such as pools, tennis courts, walkways, or other) co-owned in undivided interest with others. If yes, complete the following: Any optional user fees for common facilities charged? __ yes __ no If yes, describe: _____
__	X	Any notices of violations of deed restrictions or governmental ordinances affecting the condition or use of the Property.
__	X	Any lawsuits or other legal proceedings directly or indirectly affecting the Property. (Includes, but is not limited to: divorce, foreclosure, heirship, bankruptcy, and taxes.)
__	X	Any death on the Property except for those deaths caused by: natural causes, suicide, or accident unrelated to the condition of the Property.
__	X	Any condition on the Property which materially affects the health or safety of an individual.
__	X	Any repairs or treatments, other than routine maintenance, made to the Property to remediate environmental hazards such as asbestos, radon, lead-based paint, urea-formaldehyde, or mold. If yes, attach any certificates or other documentation identifying the extent of the remediation (for example, certificate of mold remediation or other remediation).
__	X	Any rainwater harvesting system located on the Property that is larger than 500 gallons and that uses a public water supply as an auxiliary water source.

Concerning the Property at 9352 N RR 783 Harper , TX 78631

Y N

__ X The Property is located in a propane gas system service area owned by a propane distribution system retailer.

__ X Any portion of the Property that is located in a groundwater conservation district or a subsidence district.

If the answer to any of the items in Section 8 is yes, explain (attach additional sheets if necessary): _____

Section 9. Within the last 4 years, have you (Seller) received any written inspection reports from persons who regularly provide inspections and who are either licensed as inspectors or otherwise permitted by law to perform inspections? __ yes __ no If yes, attach copies and complete the following:

Inspection Date	Type	Name of Inspector	No. of Pages
7-14-2025	Real Estate	Benjamin Feuge	25

Note: A buyer should not rely on the above-cited reports as a reflection of the current condition of the Property. A buyer should obtain inspections from inspectors chosen by the buyer.

Section 10. Check any tax exemption(s) which you (Seller) currently claim for the Property:

__ Homestead __ Senior Citizen __ Disabled
__ Wildlife Management X Agricultural same as Main __ Disabled Veteran
__ Other: _____ __ Unknown

Section 11. Have you (Seller) ever filed a claim for damage, other than flood damage, to the Property with any insurance provider? __ yes X no

Section 12. Have you (Seller) ever received proceeds for a claim for damage to the Property (for example, an insurance claim or a settlement or award in a legal proceeding) and not used the proceeds to make the repairs for which the claim was made? __ yes X no If yes, explain: _____

Section 13. Does the Property have working smoke detectors installed in accordance with the smoke detector requirements of Chapter 766 of the Health and Safety Code?* X unknown __ no __ yes. If no or unknown, explain. (Attach additional sheets if necessary): unfamiliar w/ that Safety Code

**Chapter 766 of the Health and Safety Code requires one-family or two-family dwellings to have working smoke detectors installed in accordance with the requirements of the building code in effect in the area in which the dwelling is located, including performance, location, and power source requirements. If you do not know the building code requirements in effect in your area, you may check unknown above or contact your local building official for more information.*

A buyer may require a seller to install smoke detectors for the hearing impaired if: (1) the buyer or a member of the buyer's family who will reside in the dwelling is hearing-impaired; (2) the buyer gives the seller written evidence of the hearing impairment from a licensed physician; and (3) within 10 days after the effective date, the buyer makes a written request for the seller to install smoke detectors for the hearing-impaired and specifies the locations for installation. The parties may agree who will bear the cost of installing the smoke detectors and which brand of smoke detectors to install.

Concerning the Property at 9352 N RR 783
Harper , TX 78631

Seller acknowledges that the statements in this notice are true to the best of Seller's belief and that no person, including the broker(s), has instructed or influenced Seller to provide inaccurate information or to omit any material information.

Mary E. Kochelek, Trustee
Signature of Seller Date Signature of Seller Date

Printed Name: Mary E Kochelek, Trustee Printed Name: _____

ADDITIONAL NOTICES TO BUYER:

(1) The Texas Department of Public Safety maintains a database that the public may search, at no cost, to determine if registered sex offenders are located in certain zip code areas. To search the database, visit https://publicsite.dps.texas.gov. For information concerning past criminal activity in certain areas or neighborhoods, contact the local police department.

(2) If the Property is located in a coastal area that is seaward of the Gulf Intracoastal Waterway or within 1,000 feet of the mean high tide bordering the Gulf of Mexico, the Property may be subject to the Open Beaches Act or the Dune Protection Act (Chapter 61 or 63, Natural Resources Code, respectively) and a beachfront construction certificate or dune protection permit may be required for repairs or improvements. Contact the local government with ordinance authority over construction adjacent to public beaches for more information.

(3) If the Property is located in a seacoast territory of this state designated as a catastrophe area by the Commissioner of the Texas Department of Insurance, the Property may be subject to additional requirements to obtain or continue windstorm and hail insurance. A certificate of compliance may be required for repairs or improvements to the Property. For more information, please review *Information Regarding Windstorm and Hail Insurance for Certain Properties* (TXR 2518) and contact the Texas Department of Insurance or the Texas Windstorm Insurance Association.

(4) This Property may be located near a military installation and may be affected by high noise or air installation compatible use zones or other operations. Information relating to high noise and compatible use zones is available in the most recent Air Installation Compatible Use Zone Study or Joint Land Use Study prepared for a military installation and may be accessed on the Internet website of the military installation and of the county and any municipality in which the military installation is located.

(5) If you are basing your offers on square footage, measurements, or boundaries, you should have those items independently measured to verify any reported information.

(6) The following providers currently provide service to the Property: See Main House Disclosure

Electric: _____ phone #: _____
Sewer: _____ phone #: _____
Water: _____ phone #: _____
Cable: _____ phone #: _____
Trash: _____ phone #: _____
Natural Gas: _____ phone #: _____
Phone Company: _____ phone #: _____
Propane: _____ phone #: _____
Internet: _____ phone #: _____

TEXAS REALTORS

INFORMATION ABOUT ON-SITE SEWER FACILITY

USE OF THIS FORM BY PERSONS WHO ARE NOT MEMBERS OF THE TEXAS FORMSOURCE IS NOT AUTHORIZED.
©Texas Association of REALTORS®, Inc., 2004

Barn Apt

CONCERNING THE PROPERTY AT 9352 N RR 783 Harper , TX 78631

A. DESCRIPTION OF ON-SITE SEWER FACILITY ON PROPERTY:

(1) Type of Treatment System: [x] Septic Tank [ ] Aerobic Treatment [ ] Unknown
[ ] _____

(2) Type of Distribution System: Drain Field [ ] Unknown

(3) Approximate Location of Drain Field or Distribution System: _____ [ ] Unknown
Southwest of Horse Barn

(4) Installer: Dave Smith [ ] Unknown

(5) Approximate Age: 18 years [ ] Unknown

B. MAINTENANCE INFORMATION:

(1) Is Seller aware of any maintenance contract in effect for the on-site sewer facility? [ ] Yes [x] No
If yes, name of maintenance contractor: _____
Phone: _____ contract expiration date: _____
Maintenance contracts must be in effect to operate aerobic treatment and certain non-standard" on-site sewer facilities.)

(2) Approximate date any tanks were last pumped? October 2020

(3) Is Seller aware of any defect or malfunction in the on-site sewer facility? [ ] Yes [X] No
If yes, explain: _____

(4) Does Seller have manufacturer or warranty information available for review? [ ] Yes [X] No

C. PLANNING MATERIALS, PERMITS, AND CONTRACTS:

(1) The following items concerning the on-site sewer facility are attached:
[ ] planning materials [x] permit for original installation [x] final inspection when OSSF was installed
[ ] maintenance contract [ ] manufacturer information [ ] warranty information [ ] _____
750/2c Serial # 328071 Buchanan Septic Tank

(2) "Planning materials" are the supporting materials that describe the on-site sewer facility that are submitted to the permitting authority in order to obtain a permit to install the on-site sewer facility.

(3) **It may be necessary for a buyer to have the permit to operate an on-site sewer facility transferred to the buyer.**

This form is for the exclusive use of the subscriber named below. Any use by others is strictly prohibited. Use of this form does not indicate membership in Texas REALTORS®.
Fredericksburg Realty, 257 West Main Street Fredericksburg TX 78624 Phone: (830) 998-2896 Fax:
Justin Cop
Produced with Lone Wolf Transactions (zipForm Edition) 717 N Harwood St, Suite 2200, Dallas, TX 75201 www.lwolf.com

D. INFORMATION FROM GOVERNMENTAL AGENCIES: Pamphlets describing on-site sewer facilities are available from the Texas Agricultural Extension Service. Information in the following table was obtained from Texas Commission on Environmental Quality (TCEQ) on 10/24/2002. The table estimates daily wastewater usage rates. Actual water usage data or other methods for calculating may be used if accurate and acceptable to TCEQ.

Facility	Usage (gal/day) without water-saving devices	Usage (gal/day) with water-saving devices
Single family dwelling (1-2 bedrooms; less than 1,500 sf)	225	180
Single family dwelling (3 bedrooms; less than 2,500 sf)	300	240
Single family dwelling (4 bedrooms; less than 3,500 sf)	375	300
Single family dwelling (5 bedrooms; less than 4,500 sf)	450	360
Single family dwelling (6 bedrooms; less than 5,500 sf)	525	420
Mobile home, condo, or townhouse (1-2 bedroom)	225	180
Mobile home, condo, or townhouse (each add'l bedroom)	75	60

This document is not a substitute for any inspections or warranties. This document was completed to the best of Seller's knowledge and belief on the date signed. Seller and real estate agents are not experts about on-site sewer facilities. Buyer is encouraged to have the on-site sewer facility inspected by an inspector of Buyer's choice.

Mary E Kochelek 7-31-2025

Signature of Seller Date
Mary E Kochelek

Signature of Seller Date

Receipt acknowledged by:

Signature of Buyer Date

Signature of Buyer Date

Produced with Lone Wolf Transactions (zipForm Edition) 717 N Harwood St, Suite 2200, Dallas, TX 75201 www.lwolf.com 9352 N RR 783

Gillespie County Application for On-Site Sewage Facility

(Permit application is good for 1year from purchase date)

Permit # 5543 Date: 4/21/07 Fee: 150.00

Reason for Permit (Circle one): New Construction System Replacement System Repair

Name of Landowner: Miles (Last), Carl (First), A (MI)

Mailing Address: PO Box 36 (Street # and name), Doss Tx (City & State), 78618 (Zip code)

Physical Address/**Location of new septic system**: 9352 Unit B RR 783 N (Street # and name)

Harper Tx (City & State), 78631 (Zip code)

Daytime Phone Number(s): 830-669-2863 Cell Number(s): 832-687-4595

Legal Description: Volume:_____ Page: _____ Gillespie County Tax I. D. # : R_____

Subdivision Name:_____ Lot_____ Blk_____ Phase_____ Tract_____

Abstract #_____ Survey Name and #_____

Total Acreage: 85 ☑ Private Well ☐ Public Well (Supplier's Name)_____

Name & license # of person installing the septic system: Dave Smith OS00025584 (OS#)

Information on a Single Family Residence: ☑ House ☐ Mobile Home ☐ Manufactured

Total Square Footage of Living Area: ☑ <1500 ☐ <2500 ☐ <3500 ☐ <4500 ☐ _____

# of bedrooms 1, # of bathrooms (Full) 1, (Half)____, Does it have or will it have water saving devices such as, low flush toilets, reduced flow shower heads or faucets, pressure reducing valves and/or faucet aerators? ✓ Yes ___No Water Softener (Demand-Initiated Regeneration) Circle: Y or N

Is the water softener plumbed separate from the OSSF: Y or N

Information on a Non-Single Family Residence or Commercial/Institutional Facility (including Multi-family residences) Describe usage: _____

I certify that the above statements are true and correct to the best of my knowledge. Authorization is hereby given to Gillespie County OSSF Department to enter upon the above described property for the purpose of soil/site evaluation and investigation of an on-site sewage facility.

(Signature of Landowner) 4/21/07 (Date)

Office use only: CASST 4/25/07

Daily wastewater usage rate: Q=_____(gallons/day)

☑ Site Evaluation

☑ Planning Materials submitted by: ☐ Installer ☐ P. E. ☐ R. S.

☐ Development Plans required for Subdivisions, Manufactured Housing Communities, Multi-Unit Residential Development, Business Parks, or other similar uses (i.e. B&B Rental, R. V. Park)

☐ Floodplain

For Aerobic Treatment units and non-standard treatment (if applicable):

☐ *Affidavit to the Public*

☐ Two-year maintenance contract

☑ AUTHORIZATION to CONSTRUCT Date: 4/23/07

SCANNED 5164

Certification of Approval

Final Inspection Permit # 5543

Date: May 1, 2007 Approved by: D Wayne C Boos

I. Sewer (House Drain): ☑ 3" Sch 40 ☐ 4" Sch 40 ☐ Other: _____

Slope of sewer pipe to tank ☑ minimum of 1/8"/ft.

☑ Cleanouts every 50 ft. and within 5 ft. of 90° bends

II. Treatment: ☑ Conventional Tanks ☐ Aerobic ☐ Other: _____

TANKS SIZE AND COMPARTMENTS	SERIAL#	RISER	MANUFACTURER
1. 750/2C	328071	Y/N	BUCHANAN SEPTIC
2.		Y/N	
3.		Y/N	
4.		Y/N	

III. Disposal Field: ☐ Conventional Gravel ☐ Leaching Chambers (Brand) _____

☐ Low-Pressure Pipe ☐ Mounds ☐ Gravel-Less Pipe ☐ Pressure Emitters (drip)

☐ ET Beds ☐ Other: _____

Subsurface Disposal:

LENGTH OF TRENCH	WIDTH	HEIGHT OF MEDIA	CREDIT	SQUARE FEET AREA=LENGTH X CREDIT
1. 82 ft.	3 ft.	1 ft.	5 ft.	410 Sq. ft.
2. ft.	ft.	ft.	ft.	Sq. ft.

IV. Surface Disposal (Application): HOUSE SEE PERMIT # 4824

Loading Rate: _____ Area Required in Sq. ft. _____

Area Designed in Sq. ft. _____

Timer installed----------Y/N

Anti-siphon Hole used-----Y/N

Check valve used----------Y/N

V. Map of System: GPS UTM 14 R 0481926 3364115

Not to Scale

WELL

+200' TO DISPOSAL FIELD

21.5
21.5
22
17.5
82.5

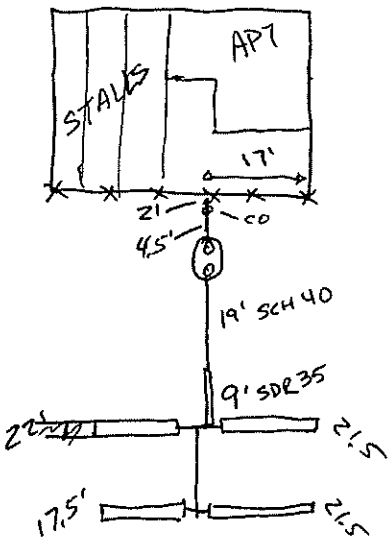

CERTIFICATION OF APPROVAL

FINAL INSPECTION

DATE JULY 8, 2004 PERMIT NO. 4824 FEE _____

MANUFACTURER BUCHANAN SEPTIC TANKS

TANK #1 SN# 623041 TANK #2 SN# —

SIZE TANK #1 ~~750~~ 1000/2C GALS. TANK #2 — GALS. TYPE Concrete

ABSORPTION TRENCH (✓) LENGTH ~~137.5~~ 181.25 WIDTH 3' (5' CREDIT)

LEACHING CHAMBERS

ABSORPTION BED AREA ( ) SQUARE FEET ~~687.5~~ 906.25 SQ FT

COMMERCIAL ( ) PRIVATE RESIDENCE (✓)

INSTALLER OR CONTRACTOR Dewayne MARTIN Lic. # OS 2504-PH 325-3475

ADDRESS MASON PHONE # _____

DATE JULY 8, 2004 FINAL INSPECTION MADE BY Dwayne CBoor

(INSPECTION IS REQUIRED AFTER TANK AND PIPES ARE INSTALLED, BUT NOT COVERED)

MAKE A SKETCH OF SYSTEM

(NOT TO SCALE)

LEACHING CHAMBERS
"INFILTRATOR"

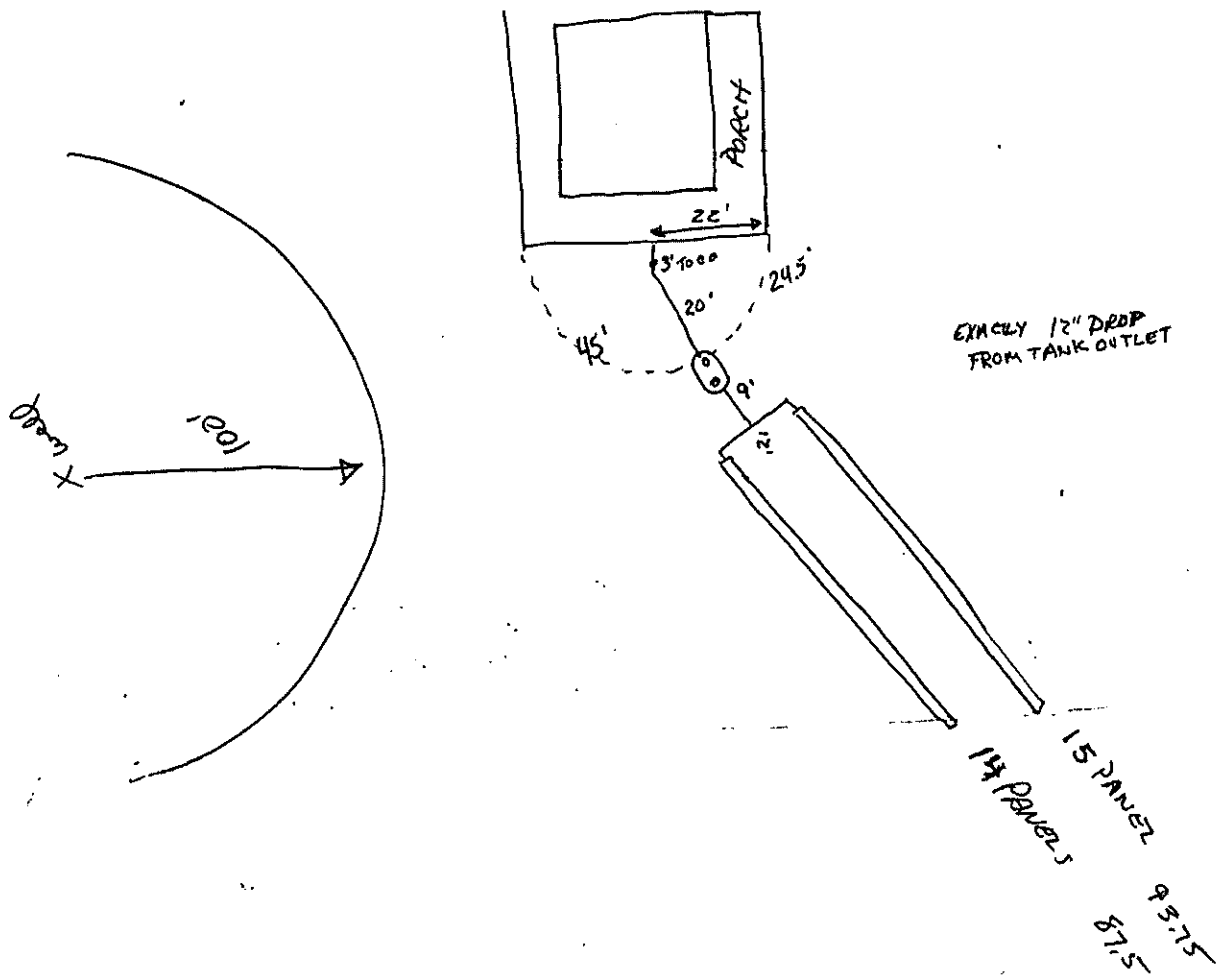

Gillespie CAD Property Search

Property ID: 87238 For Year 2025

Property Details

Account			
Property ID:	87238	**Geographic ID:**	A0640-0310-000000-00
Type:	R	**Zoning:**	
Property Use:		**Condo:**	
Location			
Situs Address:	9352 N RANCH ROAD 783 TX		
Map ID:	3-D	**Mapsco:**	
Legal Description:	ABS A0640 A SAN MIGUEL #310, 5.0 ACRES, -HOMESITE-		
Abstract/Subdivision:	A0640		
Neighborhood:	(D200) DOSS SW LAND ZONE		
Owner			
Owner ID:	338072		
Name:	KOCHELEK TRUST		
Agent:			
Mailing Address:	%KOCHELEK, JEFFREY T & MARY E TRUSTEES 617 CANYON RIM DRIPPING SPRINGS, TX 78620		
% Ownership:	100.0%		
Exemptions:	For privacy reasons not all exemptions are shown online.		

Property Values

Improvement Homesite Value:	$730,290 (+)
Improvement Non-Homesite Value:	$192,220 (+)
Land Homesite Value:	$52,090 (+)
Land Non-Homesite Value:	$0 (+)
Agricultural Market Valuation:	$0 (+)

Market Value:	$974,600 (=)
Agricultural Value Loss:	$0 (-)
Appraised Value:	$974,600 (=)
HS Cap Loss:	$0 (-)
Circuit Breaker:	$0 (-)
Assessed Value:	$974,600
Ag Use Value:	$0

2025 values are preliminary and subject to change prior to certification.

Information provided for research purposes only. Legal descriptions and acreage amounts are for Appraisal District use only and should be verified prior to using for legal purpose and or documents. Please contact the Appraisal District to verify all information for accuracy.

Property Taxing Jurisdiction

Owner: KOCHELEK TRUST

Entity	Description	Market Value	Taxable Value	Estimated Tax	Freeze Ceiling
G086	GILLESPIE COUNTY	$974,600	$974,600	$2,616.80	
HUW	HILL CNTRY UWCD	$974,600	$974,600	$46.78	
SD	DOSS CCSD	$974,600	$974,600	$6,499.61	
WCD	GILLESPIE WCID	$974,600	$974,600	$1.70	
CAD	GILLESPIE CENTRAL APPRAISAL DISTRICT	$974,600	$974,600	$0.00	

Total Tax Rate: 0.940374

Estimated Taxes With Exemptions: $9,164.89

Estimated Taxes Without Exemptions: $9,164.89

Property Improvement - Building

Description: RESIDENTIAL **Type:** RESIDENTIAL **Living Area:** 2076.0 sqft **Value:** $730,290

Type	Description	Class CD	Year Built	SQFT
MA	MAIN AREA	M6P	2004	1908
MA3	MAIN AREA HALF STORY	M6P	2004	168
STG	STORAGE	M6P	2004	96
OP	OPEN PORCH	M6P	2004	1440
CP	CARPORT	M6P	2004	600
STG	STORAGE	*	0	80
OP	OPEN PORCH	*	0	468
SHED	SHED	*	0	112
OP	OPEN PORCH	*	0	32

Description: RESIDENTIAL **Type:** RESIDENTIAL **Living Area:** 750.0 sqft **Value:** $192,220

Type	Description	Class CD	Year Built	SQFT
MA	MAIN AREA	F3P	2007	750
OP	OPEN PORCH	F3P	0	200
WKS	WORK SHOP	*	0	600
CP	CARPORT	*	0	750
SHED	SHED	*	0	700

Property Land

Type	Description	Acreage	Sqft	Eff Front	Eff Depth	Market Value	Prod. Value
RN2	NATIVE PASTURE 2	5.00	217,800.00	0.00	0.00	$52,090	$0

Property Roll Value History

Year	Improvements	Land Market	Ag Valuation	Appraised	HS Cap Loss	Assessed
2025	$922,510	$52,090	$0	$974,600	$0	$974,600
2024	$893,460	$52,090	$0	$945,550	$0	$945,550
2023	$893,460	$49,740	$0	$943,200	$0	$943,200
2022	$803,900	$44,480	$0	$848,380	$0	$848,380
2021	$735,590	$33,980	$0	$769,570	$0	$769,570
2020	$471,360	$31,190	$0	$502,550	$0	$502,550
2019	$471,360	$31,190	$0	$502,550	$0	$502,550
2018	$347,880	$30,000	$0	$377,880	$0	$377,880

2017	$339,050	$25,000	$0	$364,050	$0	$364,050
2016	$307,450	$25,000	$0	$332,450	$0	$332,450

Property Deed History

Deed Date	Type	Description	Grantor	Grantee	Volume	Page	Number
10/28/2020	WDVL	WARRANTY DEED VENDORS LIEN	RAMIREZ, DAVID F & AMELIE G	KOCHELEK TRUST	20206601		
6/26/2012	WDVL	WARRANTY DEED VENDORS LIEN	MILES, CARY A & CHERYL C	RAMIREZ, DAVID F & AMELIE G	2012541		

ARB Data

Hearing Date And Time	Board Members	Owner's Opinion Of Value	Board's Determination Of Value	ARB Determination

Estimated Tax Due

If Paid: 07/01/2025

Year	Taxing Jurisdiction	Tax Rate	Market Value	Taxable Value	Base Tax	Base Taxes Paid	Base Tax Due	Discount/Penalty & Interest	Atto
2024	GILLESPIE COUNTY	0.268500	$945,550	$945,550	$2,538.80	$2,538.80	$0.00	$0.00	$
2024	HILL CNTRY UWCD	0.004800	$945,550	$945,550	$45.39	$45.39	$0.00	$0.00	$
2024	DOSS CCSD	0.666900	$945,550	$945,550	$6,305.87	$6,305.87	$0.00	$0.00	$
2024	GILLESPIE WCID	0.000174	$945,550	$945,550	$1.65	$1.65	$0.00	$0.00	$
	2024 Total:	0.940374			$8,891.71	$8,891.71	$0.00	$0.00	$
2023	GILLESPIE COUNTY	0.279600	$943,200	$943,200	$2,637.19	$2,637.19	$0.00	$0.00	$
2023	HILL CNTRY UWCD	0.004700	$943,200	$943,200	$44.33	$44.33	$0.00	$0.00	$

Gillespie CAD Property Search

Property ID: 5164 For Year 2025

Property Details

Account			
Property ID:	5164	**Geographic ID:**	A0640-0310-000000-00
Type:	R	**Zoning:**	
Property Use:		**Condo:**	
Location			
Situs Address:	9352 N RANCH ROAD 783 TX		
Map ID:	3-D	**Mapsco:**	
Legal Description:	ABS A0640 A SAN MIGUEL #310, 79.15 ACRES		
Abstract/Subdivision:	A0640		
Neighborhood:	(D200) DOSS SW LAND ZONE		
Owner			
Owner ID:	338072		
Name:	KOCHELEK TRUST		
Agent:			
Mailing Address:	%KOCHELEK, JEFFREY T & MARY E TRUSTEES 617 CANYON RIM DRIPPING SPRINGS, TX 78620		
% Ownership:	100.0%		
Exemptions:	For privacy reasons not all exemptions are shown online.		

Property Values

Improvement Homesite Value:	$0 (+)
Improvement Non-Homesite Value:	$150,710 (+)
Land Homesite Value:	$0 (+)
Land Non-Homesite Value:	$0 (+)
Agricultural Market Valuation:	$824,510 (+)

Market Value:	$975,220 (=)
Agricultural Value Loss:	$815,190 (-)
Appraised Value:	$160,030 (=)
HS Cap Loss:	$0 (-)
Circuit Breaker:	$0 (-)
Assessed Value:	$160,030
Ag Use Value:	$9,320

2025 values are preliminary and subject to change prior to certification.

Information provided for research purposes only. Legal descriptions and acreage amounts are for Appraisal District use only and should be verified prior to using for legal purpose and or documents. Please contact the Appraisal District to verify all information for accuracy.

Property Taxing Jurisdiction

Owner: KOCHELEK TRUST

Entity	Description	Market Value	Taxable Value	Estimated Tax	Freeze Ceiling
G086	GILLESPIE COUNTY	$975,220	$160,030	$429.68	
HUW	HILL CNTRY UWCD	$975,220	$160,030	$7.68	
SD	DOSS CCSD	$975,220	$160,030	$1,067.24	
WCD	GILLESPIE WCID	$975,220	$160,030	$0.28	
CAD	GILLESPIE CENTRAL APPRAISAL DISTRICT	$975,220	$160,030	$0.00	

Total Tax Rate: 0.940374

Estimated Taxes With Exemptions: $1,504.88

Estimated Taxes Without Exemptions: $9,170.72

Property Improvement - Building

Type: MISC IMP **Living Area:** 504.0 sqft **Value:** $150,710

Type	Description	Class CD	Year Built	SQFT
MA	MAIN AREA	F4	2007	504
OP	OPEN PORCH	*	2007	280
STG	STORAGE	*	2007	160
BARN	BARN	BARN4	2007	1008
BARN	BARN	BARN4	2007	120
SHED	SHED	*	2007	640
SHED	SHED	*	2007	360
BARN	BARN	BARN4	0	400

Property Land

Type	Description	Acreage	Sqft	Eff Front	Eff Depth	Market Value	Prod. Value
TD2	TILLABLE DRY 2	11.20	487,872.00	0.00	0.00	$116,670	$1,480
RN1	NATIVE PASTURE 1	42.20	1,838,232.00	0.00	0.00	$439,600	$4,960
RN2	NATIVE PASTURE 2	25.75	1,121,670.00	0.00	0.00	$268,240	$2,880

Property Roll Value History

Year	Improvements	Land Market	Ag Valuation	Appraised	HS Cap Loss	Assessed
2025	$150,710	$824,510	$9,320	$160,030	$0	$160,030
2024	$153,120	$824,510	$8,650	$161,770	$0	$161,770
2023	$153,120	$787,390	$8,680	$161,800	$0	$161,800
2022	$145,470	$704,140	$8,170	$153,640	$0	$153,640
2021	$136,990	$537,920	$8,130	$145,120	$0	$145,120
2020	$92,650	$493,710	$6,960	$99,610	$0	$99,610
2019	$92,650	$493,710	$6,960	$99,610	$0	$99,610
2018	$119,660	$474,900	$6,660	$126,320	$0	$126,320
2017	$118,110	$395,750	$6,570	$124,680	$0	$124,680
2016	$111,380	$395,750	$6,530	$117,910	$0	$117,910

Property Deed History

Deed Date	Type	Description	Grantor	Grantee	Volume	Page	Number

10/28/2020	WDVL	WARRANTY DEED VENDORS LIEN	RAMIREZ, DAVID F & AMELIE G	KOCHELEK TRUST	20206601		
6/26/2012	WDVL	WARRANTY DEED VENDORS LIEN	MILES, CARY A & CHERYL C	RAMIREZ, DAVID F & AMELIE G	2012541		
8/11/2003	WDVL	WARRANTY DEED VENDORS LIEN	BEHRENS, ELVIN T & SUSAN J	MILES, CARY A & CHERYL C	516	773	0

ARB Data

Hearing Date And Time	Board Members	Owner's Opinion Of Value	Board's Determination Of Value	ARB Determination

Estimated Tax Due

If Paid: 07/01/2025 17

Year	Taxing Jurisdiction	Tax Rate	Market Value	Taxable Value	Base Tax	Base Taxes Paid	Base Tax Due	Discount/Penalty & Interest	Attorn Fe
2024	GILLESPIE COUNTY	0.268500	$977,630	$161,770	$434.35	$434.35	$0.00	$0.00	$0.
2024	HILL CNTRY UWCD	0.004800	$977,630	$161,770	$7.76	$7.76	$0.00	$0.00	$0.
2024	DOSS CCSD	0.666900	$977,630	$161,770	$1,078.84	$1,078.84	$0.00	$0.00	$0.
2024	GILLESPIE WCID	0.000174	$977,630	$161,770	$0.28	$0.28	$0.00	$0.00	$0.
	2024 Total:	0.940374			$1,521.23	$1,521.23	$0.00	$0.00	$0.
2023	GILLESPIE COUNTY	0.279600	$940,510	$161,800	$452.39	$452.39	$0.00	$0.00	$0.
2023	HILL CNTRY UWCD	0.004700	$940,510	$161,800	$7.60	$7.60	$0.00	$0.00	$0.
2023	DOSS CCSD	0.669200	$940,510	$161,800	$1,082.77	$1,082.77	$0.00	$0.00	$0.
2023	GILLESPIE WCID	0.000176	$940,510	$161,800	$0.28	$0.28	$0.00	$0.00	$0.
	2023 Total:	0.953676			$1,543.04	$1,543.04	$0.00	$0.00	$0.